IN	INDIA

Diagram / Parts List

VL001G

CORDLESS SCREED

2026/03

(IN) VL001G / CORDLESS SCREED

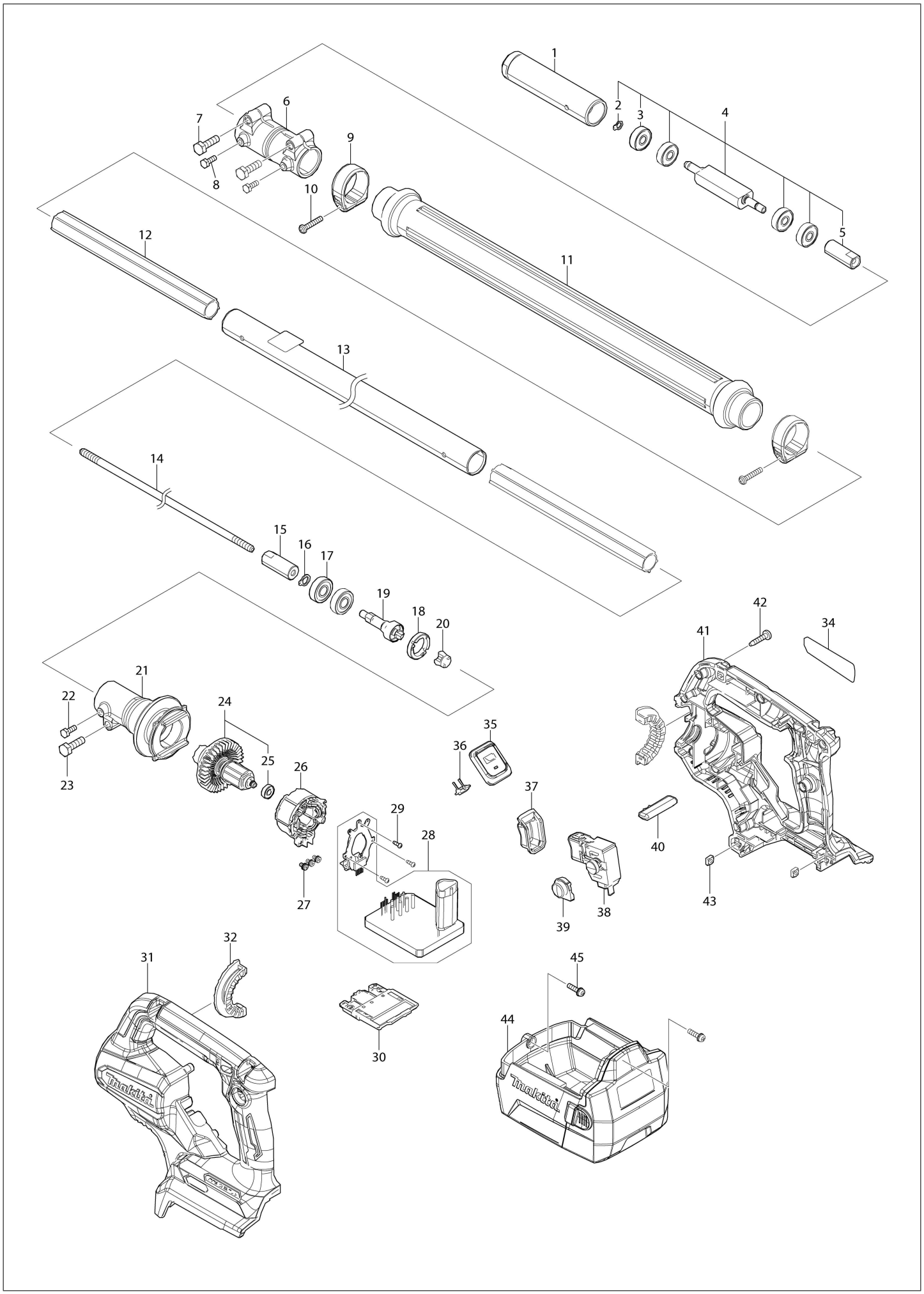

IN	INDIA

VL001G / CORDLESS SCREED

Item	Sub	Parts No.	Parts Description	Qty	I/C	E/C No.	Close No.	Remark
001		1413R0-6	Pipe 27 complete	1				
002		961003-8	Retaining ring (EXT) S-7	1				
003		211027-7	Ball bearing 627ZZ	4				
004		137433-7	UNBALANCER ASSY	1				
	D10		INC. 2,3,5					
005		327G48-2	Joint	1				
006		312J88-1	Joint 25-27	1				
007		265E92-8	Hex. head bolt M6X25	2				
008		265E91-0	Hex. head bolt M4X12	2				
009		454270-7	Band	2				
010		911148-2	Pan head screw M4X25 WR	2				
011		273044-5	Grip	1				
012		4135A3-6	Liner 16	2				
013		1412Y2-5	Pipe complete	1				
	C10	8096X0-9	CAUTION LABEL	1				
014		327G45-8	Shaft	1				
015		327G48-2	Joint	1				
016		961005-4	Retaining ring (EXT) S-9	1				
017		210217-9	Ball bearing 609ZZ	2				
018		285053-2	Bearing retainer 19-26	1				
019		141K76-5	Spindle complete	1				
020		424833-3	Spacer	1				
021		312J87-3	Pipe holder 25	1				
022		265E91-0	Hex. head bolt M4X12	1				
023		265E92-8	Hex. head bolt M6X25	1				
024		136692-0	Rotor assembly	1				
	D10		INC. 25					
025		210039-7	Ball bearing 695DDW	1				
026		629B21-1	Stator	1				
027		652069-6	Flat head screw M3X6	3				
028		620T64-4	Controller	1				
029		266490-9	Pan head tapping screw 2X6	3				
030		632P65-6	Terminal unit	1				
031		1832G4-9	HOUSING SET	1				
	C10	263005-3	Rubber pin 6	2				
	D10		INC. 41					
032		422910-5	Rubber ring	2				
034		8155R2-7	VL001G NAME PLATE	1				
035		137431-1	INDICATION PLATE ASS'Y	1				
036		620T65-2	LED circuit	1				
037		422966-8	Switch cover	1				
038		651493-0	Switch C3JW-4CM-1L	1				
039		458819-5	Lock on button cover	1				
040		458822-6	Lock lever	1				
041		1832G4-9	HOUSING SET	1				
	C10	263005-3	Rubber pin 6	2				
	D10		INC. 31					
042		266045-0	Binding head tapping screw 4X20	11				
043		252173-7	Square nut	2				
044		137467-0	BATTERY CASE S ASS'Y	1				
	C10	810196-7	Caution label	1				
	C20	8095E9-2	CAUTION LABEL	1				
045		911128-8	Pan head screw M4X16 WR	2				
F01		1910J1-0	Battery case L set	1				
F03		1910J4-4	Battery case H set	1				
F05		1917D3-6	Blade 1800 set	1				
F06		1917D4-4	Blade 1400 set	1				
F07		1917D5-2	Blade 900 set	1				

Interchange
O : Yes
X : No
< : the new part can be substituted for the current.
> : the current part can be substituted for the new.
S : Interchangeable as a set.