| IN | INDIA |
| --- | --- |

# Diagram / Parts List

## BO4565

## Finishing Sander

2026/02

# (IN) BO4565 / Finishing Sander

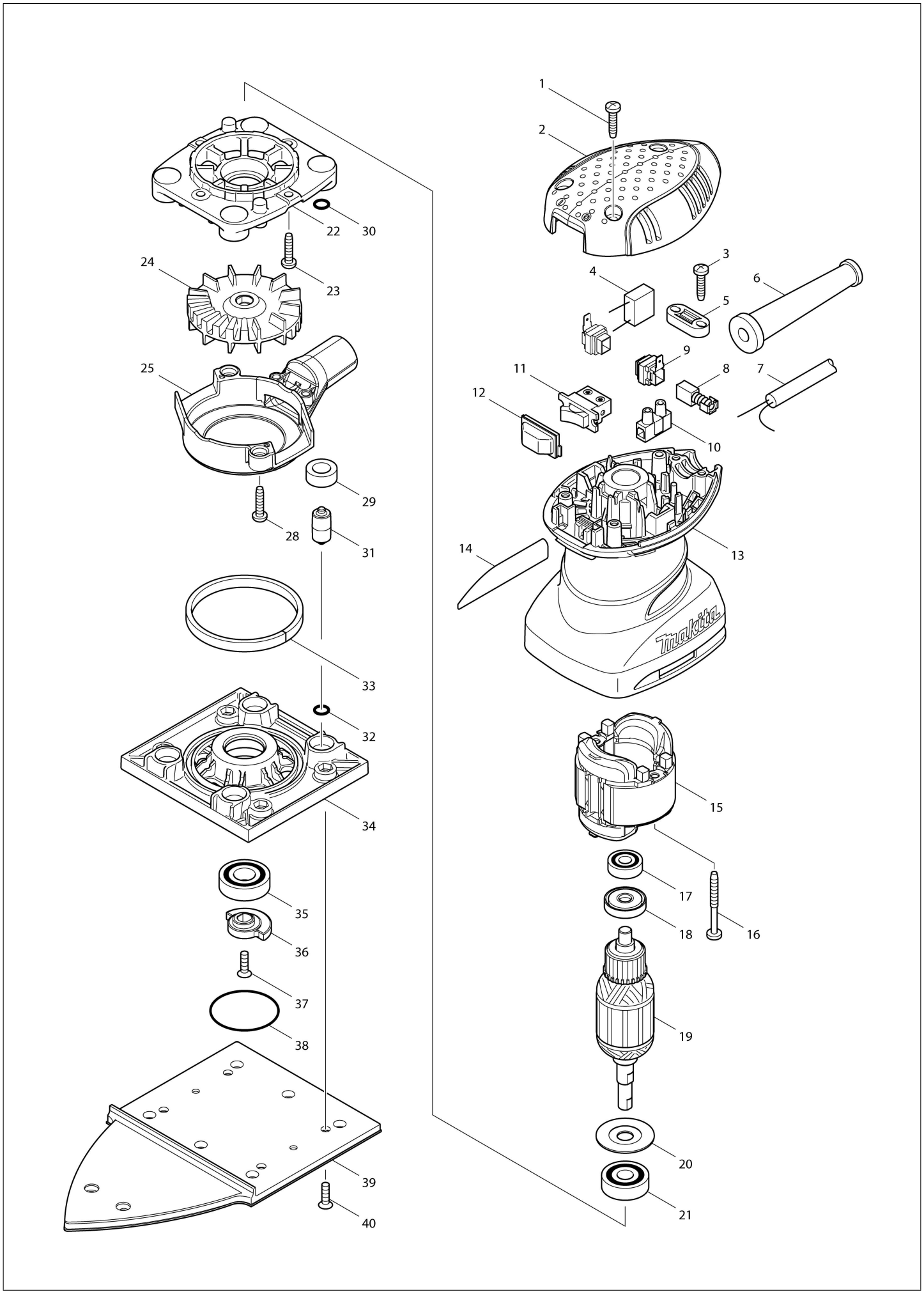

| IN | INDIA |
|---|---|

# BO4565 / Finishing Sander

| Item | Sub | Parts No. | Parts Description | Qty | I/C | E/C No. | Close No. | Remark |
|---|---|---|---|---|---|---|---|---|
| 001 | | 265995-6 | Binding head tapping screw 4X18 | 3 | | | | |
| 002 | | 450071-1 | Top cover | 1 | | | | |
| 003 | | 265995-6 | Binding head tapping screw 4X18 | 2 | | | | |
| 005 | | 687123-7 | Strain relief | 1 | | | | |
| 006 | | 682569-2 | Cord guard 8-85 | 1 | | | | |
| 007 | | 666053-5 | Power supply cord 1.0□2□2.0 | 1 | | | | |
| 008-2 | | 195015-1 | Carbon brush set CB-419 | 1 | | | | |
| 009 | | 643995-0 | Brush holder | 2 | | | | |
| 010 | | 654532-5 | Terminal block 1P | 1 | | | | |
| 011 | | 651527-9 | Switch | 1 | | | | |
| 012 | | 424039-3 | Switch cover | 1 | | | | |
| 013 | | 450072-9 | Motor housing | 1 | | | | |
| 014 | | 863735-2 | Name plate BO4565 | 1 | | | | |
| 015-1 | | 593649-8 | Field assembly 240V | 1 | | | | |
| | C11 | 654086-2 | Receptacle 42486-2 | 2 | | | | |
| 016 | | 266048-4 | Binding head tapping screw 4X40 | 2 | | | | |
| 017-2 | | 210293-3 | Ball bearing 607ZZ | 1 | | | | |
| 018 | | 681652-2 | Insulation washer | 1 | | | | |
| 019-1 | | 510558-6 | Armature assembly 220-240V | 1 | | | | |
| | D10 | | INC. 17,18,20,21 | | | | | |
| 020 | | 267806-1 | Washer 9 | 1 | | | | |
| 021 | | 211092-6 | Ball bearing 629DDW | 1 | | | | |
| 022 | | 450070-3 | Bearing box | 1 | | | | |
| 023 | | 265995-6 | Binding head tapping screw 4X18 | 4 | | | | |
| 024 | | 241671-6 | Fan 63 | 1 | | | | |
| 025 | | 450069-8 | Fan guide | 1 | | | | |
| 028 | | 265995-6 | Binding head tapping screw 4X18 | 2 | | | | |
| 029 | | 424023-8 | Sponge sleeve 9 | 4 | | | | |
| 030 | | 213983-7 | O-ring 4 | 4 | | | | |
| 031 | | 318151-8 | Foot | 4 | | | | |
| 032 | | 213983-7 | O-ring 4 | 4 | | | | |
| 033-2 | | 424684-4 | Sponge 6X87X3 | 1 | | | | |
| 034 | | 450068-0 | Base | 1 | | | | |
| 035 | | 211131-2 | Ball bearing 6001DDW | 1 | | | | |
| 036 | | 313142-4 | Balancer | 1 | | | | |
| 037 | | 912117-6 | Countersunk head screw M4X12 | 1 | | | | |
| 038 | | 213510-0 | O-ring 36 | 1 | | | | |
| 039 | | 158325-7 | Plate complete | 1 | | | | |
| 040 | | 912117-6 | Countersunk head screw M4X12 | 4 | | | | |
| A01-1 | | 135222-4 | Dust bag assembly | 1 | | | | |
| | C10 | 166078-4 | Dust bag | 1 | | | | |
| | D10 | | INC. A02-A04 | | | | | |
| A02 | | 257202-1 | Ring 25 | 1 | | | | |
| A03 | | 416063-0 | Dust bag nozzle | 1 | | | | |
| A04 | | 416064-8 | Dust nozzle | 1 | | | | |
| A05 | | 192352-4 | Abrasive paper set | 1 | | | Y09692 | |
| A05-1 | | D-58671 | ABRASIVE SHEET PAPER 60 | 1 | S | Y09692 | | |
| A06 | | 192655-6 | Abrasive paper set | 1 | | | | |
| A11 | | D-58693 | ABRASIVE SHEET PAPER 100 | 1 | S | Y09692 | | |
| A12 | | D-58718 | ABRASIVE SHEET PAPER 150 | 1 | S | Y09692 | | |
| F05 | | 195134-3 | Filter set | 1 | | | | |
| F06 | | 195133-5 | Filter set | 1 | | | | |
| F07 | | 197467-2 | Plate complete set | 1 | | A9433 | | |

Interchange
O : Yes
X : No
< : the new part can be substituted for the current.
> : the current part can be substituted for the new.
S : Interchangeable as a set.