IN	INDIA

Diagram / Parts List

HP003G

CORDLESS HAMMER DRIVER DRILL

2025/12

(IN) HP003G / CORDLESS HAMMER DRIVER DRILL

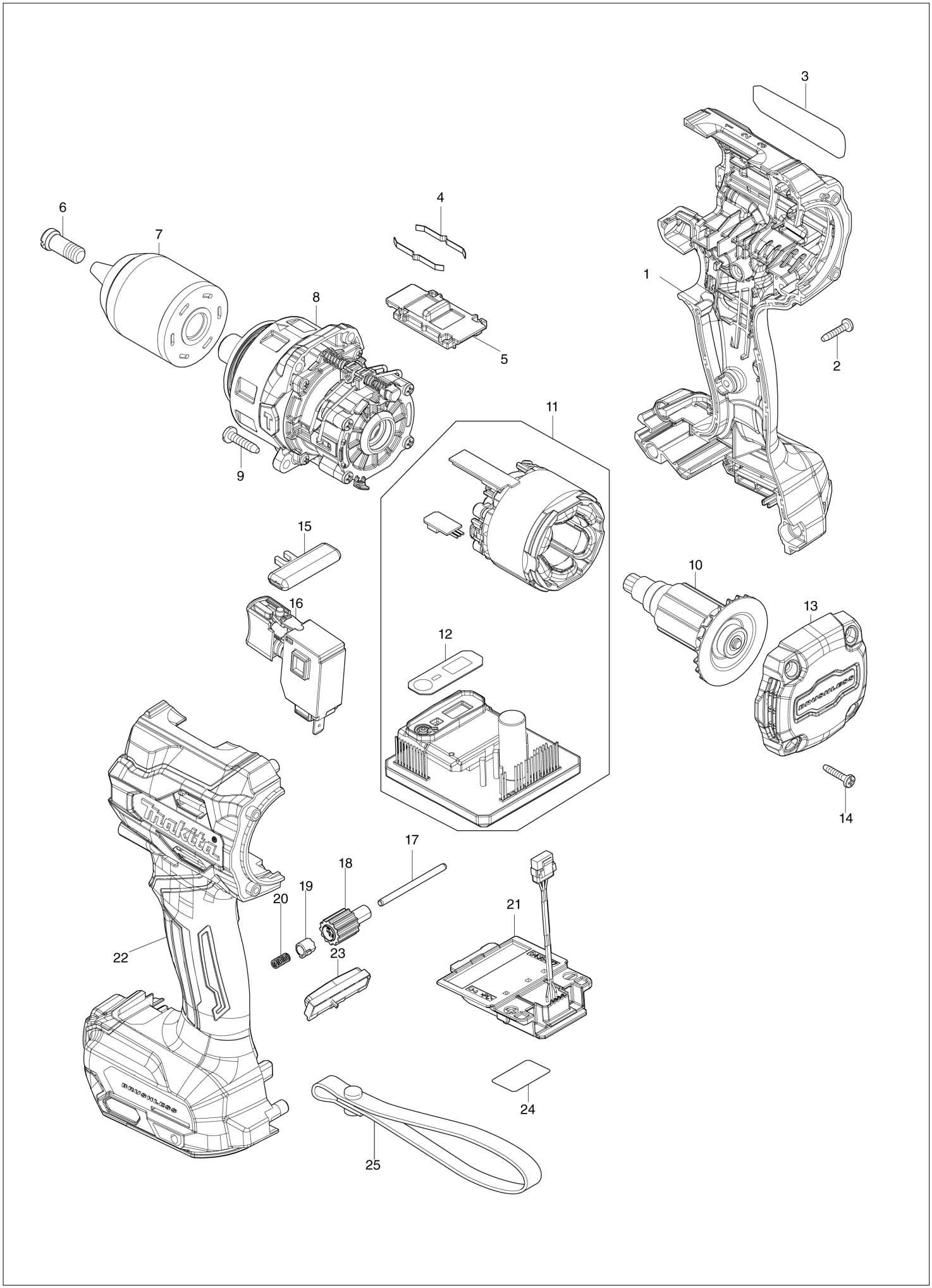

IN	INDIA

HP003G / CORDLESS HAMMER DRIVER DRILL

Item	Sub	Parts No.	Parts Description	Qty	I/C	E/C No.	Close No.	Remark
001		1831V5-6	HOUSING SET	1				
	C10	263005-3	RUBBER PIN 6	2				
	C20	422569-8	SPONGE SHEET	2				
	C30	252126-6	HEX. LOCK NUT M4-7	2				
	D10		INC. 22					
002		266130-9	TAPPING SCREW BIND PT 3X16	7				
003		8152B3-5	HP003G NAME PLATE	1				
004		232220-0	LEAF SPRING	2				
005		162E02-5	SPEED CHANGE LEVER COMPLETE	1				
006		265E30-0	- COUNTERSUNK HEAD SCREW M8X2	1				
007		763269-4	KEYLESS DRILL CHUCK 13	1				
008		122J18-2	GEAR ASSEMBLY	1				
009		266326-2	TAPPING SCREW 4X18	4				
010		619907-5	ROTOR	1				
011		529D23-8	STATOR ASS'Y 36V	1				
	D10		INC. 12					
012		8091G8-4	SWITCH LABEL	1				
013		4132W4-0	REAR COVER	1				
014		266130-9	TAPPING SCREW BIND PT 3X16	4				
015		419041-9	F/R CHANGE LEVER	1				
016		650710-5	SWITCH C3JW-4B	1				
017		256949-4	ROD 3	1				
018		140R76-4	DIAL COMPLETE	1				
019		313288-6	DIAL CAM	1				
020		232597-3	COMPRESSION SPRING 3	1				
021		632W77-1	TERMINAL UNIT	1				
022		1831V5-6	HOUSING SET	1				
	C10	263005-3	RUBBER PIN 6	2				
	C20	422569-8	SPONGE SHEET	2				
	C30	252126-6	HEX. LOCK NUT M4-7	2				
	D10		INC. 1					
023		620R06-6	LED CIRCUIT	1				
024		8152B5-1	HP003G SERIAL NO. LABEL	1				
A01		122J20-5	GRIP ASSEMBLY	1				
	C10	265785-7	THUMB SCREW M5X10	1				
A02		251314-2	+ TRUSS HEAD SCREW M4X12	2				
A03		346317-0	HOOK	1				
A04		452947-8	BIT HOLDER	1				
A05		784637-8	+- BIT 2-45	2				
A06		122576-8	STOPPER POLE ASS'Y	1				
A07B		821551-8	CONNECTOR PLASTIC CASE (TYPE3)	1				
	C10	453974-8	LATCH	4				
A08B		836548-4	INNER TRAY	1				
A09B		412393-7	BATTERY COVER	2				
A10B		***DC40RA	DC40RA FAST CHARGER	1				
	D10		COMPO-PARTS					
A11B		1910P0-4	BATTERY BL4040F SET	2			E1870	
A11-1B		1918A1-5	BATTERY BL4040F SET	2	<	E1870		
F02		1917P9-8	DRILL STAND SET	1				

A:
B:

Interchange
O : Yes
X : No
< : the new part can be substituted for the current.
> : the current part can be substituted for the new.
S : Interchangeable as a set.