IN	INDIA

Diagram / Parts List

UB002G

CORDLESS BLOWER

2025/04

(IN) UB002G / CORDLESS BLOWER

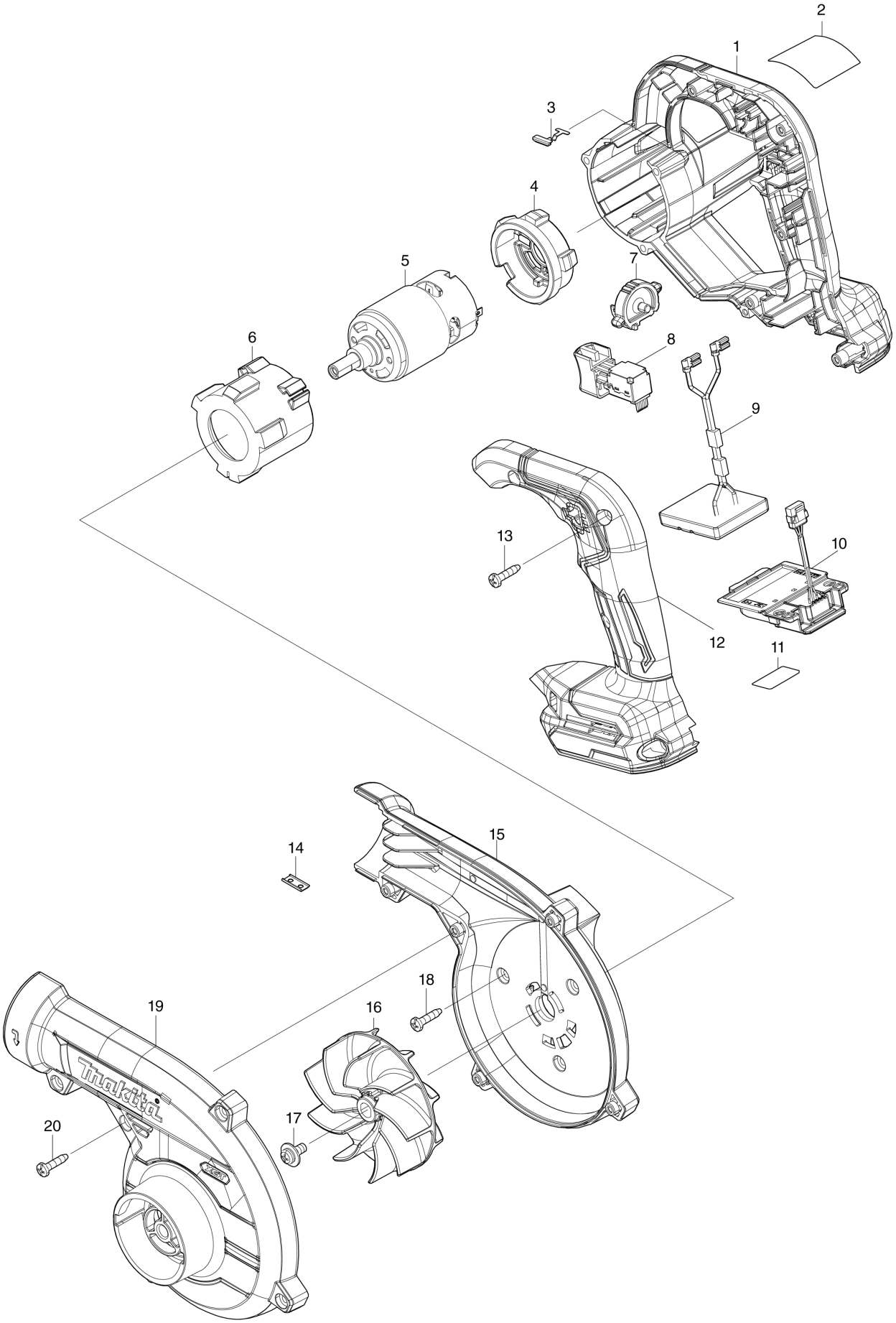

IN	INDIA

UB002G / CORDLESS BLOWER

Item	Sub	Parts No.	Parts Description	Qty	I/C	E/C No.	Close No.	Remark
001		1831D4-2	MOTOR HOUSING SET	1				
	C10	263005-3	RUBBER PIN 6	2				
	D10		INC. 12					
002		8148Y6-3	UB002G NAME PLATE	1				
003		232620-4	LEAF SPRING	1				
004		422C19-1	MOTOR RUBBER RING B	1				
005		629D06-9	DC MOTOR	1				
006		422588-4	MOTOR RUBBER RING A	1				
007		412573-5	DIAL	1				
008		650065-8	SWITCH	1				
009		632W19-5	CONTROLLER UNIT	1				
010		632R99-1	TERMINAL UNIT	1				
011		8148Y8-9	UB002G SERIAL NO. LABEL	1				
012		1831D4-2	MOTOR HOUSING SET	1				
	C10	263005-3	RUBBER PIN 6	2				
	D10		INC. 1					
013		266326-2	TAPPING SCREW 4X18	5				
014		345998-7	SET PLATE	1				
015		1831J4-4	FAN HOUSING SET	1				
	C10	8085F3-8	CAUTION LABEL	1				
	D10		INC. 19					
016		240210-9	FAN 85	1				
017		265B25-5	PAN HEAD SCREW M5X12 WITH WG	1				
018		266326-2	TAPPING SCREW 4X18	3				
019		1831J4-4	FAN HOUSING SET	1				
	C10	8085F3-8	CAUTION LABEL	1				
	D10		INC. 15					
020		266326-2	TAPPING SCREW 4X18	5				
A01		123245-4	NOZZLE ASS'Y	1				
	C10	454703-2	JOINT	1				

A:UB002GZ(N)

Interchange
O : Yes
X : No
< : the new part can be substituted for the current.
> : the current part can be substituted for the new.
S : Interchangeable as a set.