IN	INDIA

Diagram / Parts List

GD0600

DIE GRINDER

2025/01

(IN) GD0600 / DIE GRINDER

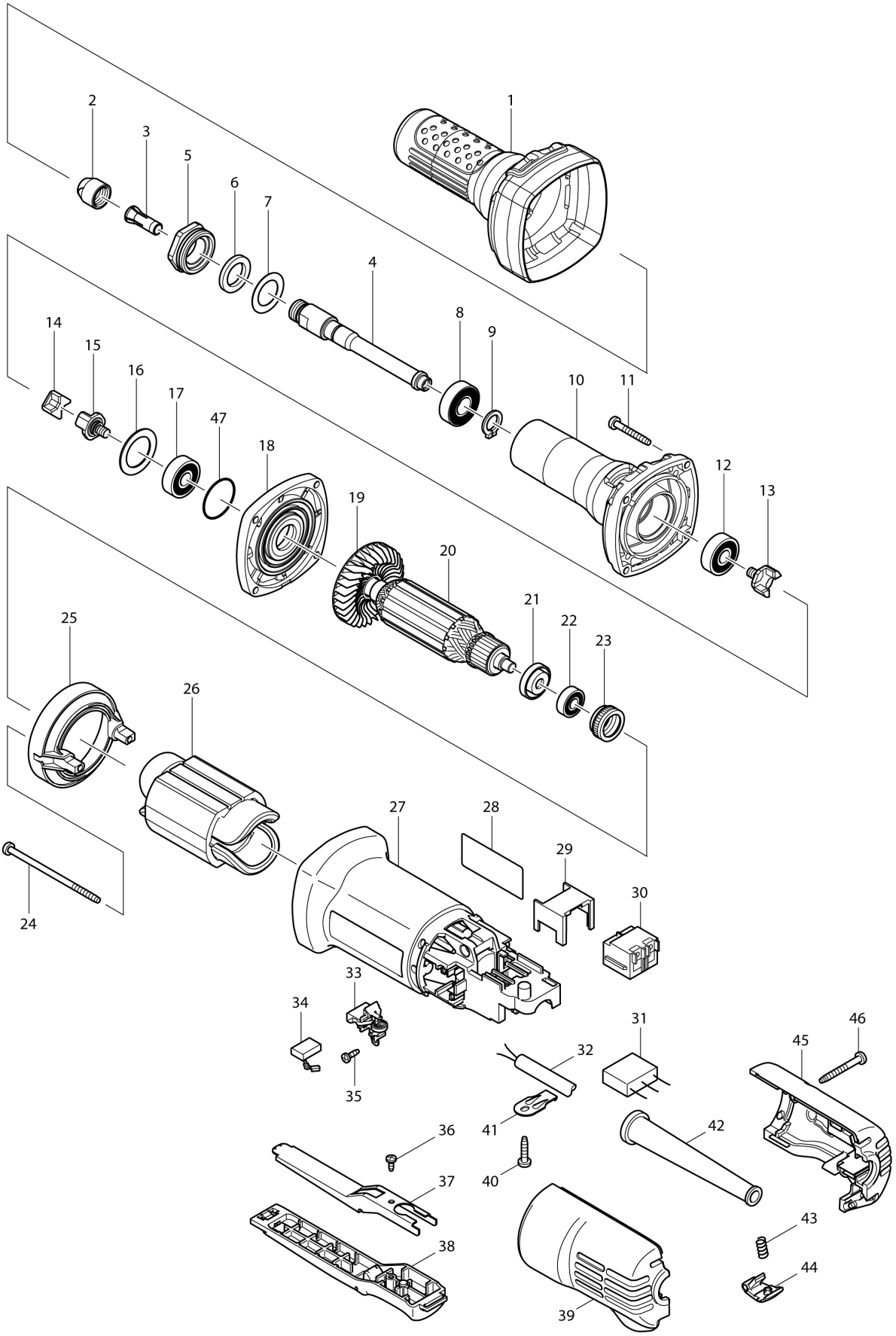

IN	INDIA

GD0600 / DIE GRINDER

Item	Sub	Parts No.	Parts Description	Qty	I/C	E/C No.	Close No.	Remark
001		421943-7	INSULATION COVER	1				
002		763664-8	COLLET NUT 6	1				
003-2		763620-8	COLLET CONE 6MM	1				
004		324638-0	SPINDLE	1				
005		317999-5	BEARING RETAINER	1				
006		443124-3	FELT RING 17	1				
007		267329-9	FLAT WASHER 18	1				
008		210106-8	BALL BEARING 6001LLB	1				
009		961052-5	RETAINING RING (EXT) S-12	1				
010		318000-9	BARREL	1				
011		266361-0	TAPPING SCREW 4X30	4				
012-1		210042-8	BALL BEARING 629LLB	1				
013		324639-8	COUPLING	1				
014		421942-9	SPACER	1				
015		324639-8	COUPLING	1				
016		267126-3	FLAT WASHER 22	1				
017-1		210042-8	BALL BEARING 629LLB	1				
018		317821-6	GEAR HOUSING COVER	1				
019		240076-7	FAN 56	1				
020		515679-9	ARMATURE ASS'Y 240V	1				
	D10		INC. 19,21,22					
021		681636-0	INSULATION WASHER	1				
022		210034-7	BALL BEARING 607LLB	1				
023-1		422768-2	LABYRINTH RUBBER RING19	1				
024		266345-8	TAPPING SCREW 4X80	2				
025-1		457791-8	BAFFLE PLATE	1				
026		621724-1	FIELD 230-240V	1				
027		418838-3	MOTOR HOUSING	1				
028		862168-8	GD0600 NAME PLATE	1				
029		418729-8	SPACER	1				
030-1		651947-7	SWITCH 1247.0302	1				
032		666066-6	POWER SUPPLY CORD 1.0-2-2.5	1				
033		643760-7	BRUSH HOLDER	2				
034		194074-2	CARBON BRUSH CB-325	1				
035		266007-8	TAPPING SCREW BIND PT 3X10	4				
036-1		266492-5	TAPPING SCREW 3X8	1				
037		345504-8	PLATE	1				
038		154584-1	SWITCH LEVER B COMPLETE	1				
039-1		183U00-2	REAR COVER SET	1				
	D10		INC. 45					
040		266326-2	TAPPING SCREW 4X18	1				
041		687169-3	STRAIN RELIEF	1				
042		682559-5	CORD GUARD 8	1				
043		231252-4	COMPRESSION SPRING 6	1				
044		418842-2	LOCK ON BUTTON	1				
045-1		183U00-2	REAR COVER SET	1				
	D10		INC. 39					
046		266351-3	TAPPING SCREW 4X35	2				
047		213445-5	O-RING 26	1				
A01		781039-9	WRENCH 13	2				

A:GD0600(H)

Interchange
O : Yes
X : No
< : the new part can be substituted for the current.
> : the current part can be substituted for the new.
S : Interchangeable as a set.