IN	INDIA

Diagram / Parts List

DHG180

HEAT GUN

2024/09

(IN) DHG180 / HEAT GUN

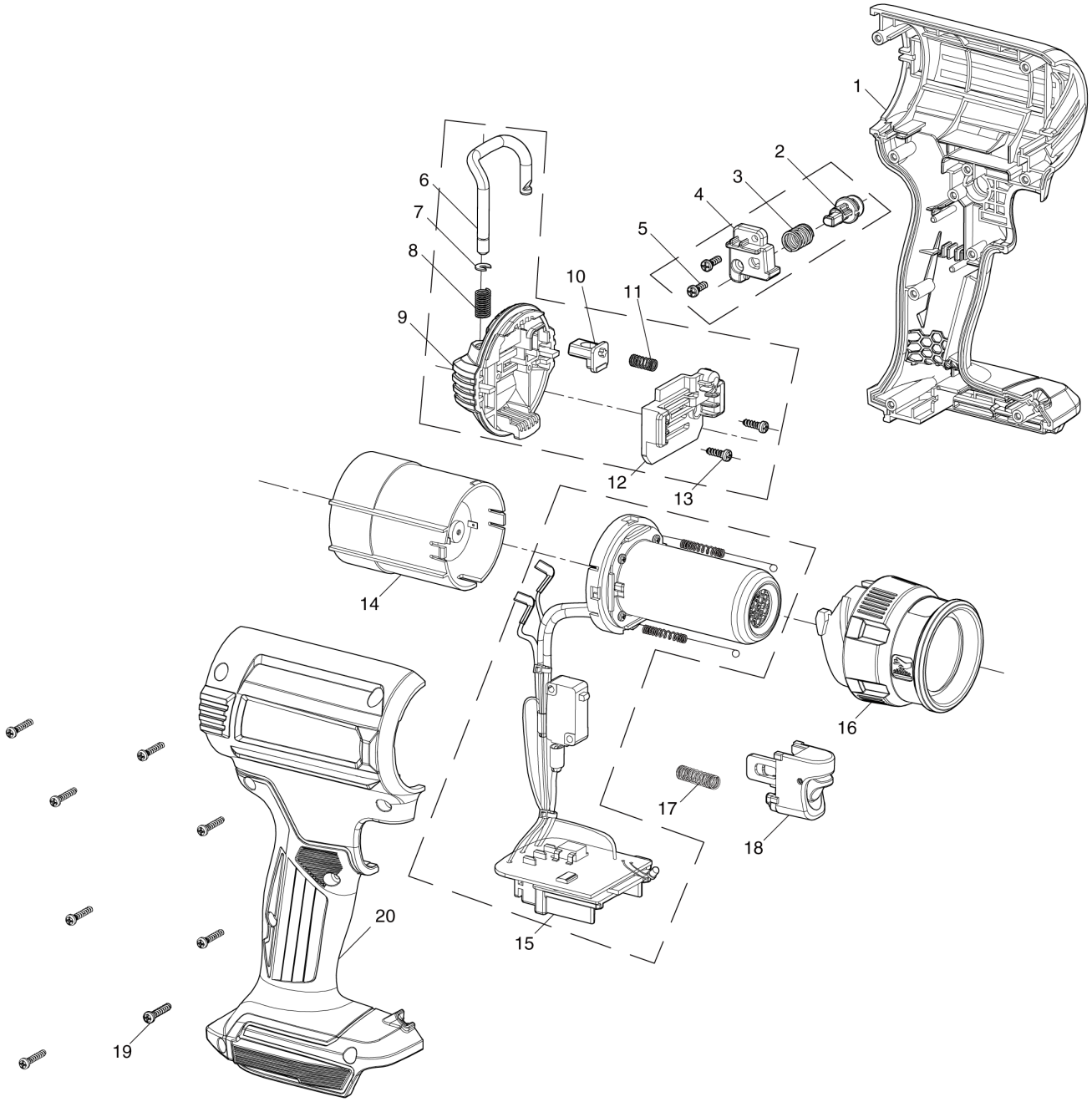

IN	INDIA

DHG180 / HEAT GUN

Item	Sub	Parts No.	Parts Description	Qty	I/C	E/C No.	Close No.	Remark
001		PR00000379	HOUSING ASSEMBLY	1				
	D10		INC. 20					
002		PR00000380	LOCK ON BUTTON	1				
003		PR00000381	SPRING9	1				
004		PR00000382	SUPPORT FRAME	1				
005		PR00000293	TAPPING SCREW ST2.9X10	2				
006		PR00000383	HOOK	1				
007		PR00000384	SNAP RING	1				
008		PR00000385	SPRING6	1				
009		PR00000386	REAR COVER	1				
010		PR00000387	HOOK RELEASE BUTTON	1				
011		PR00000388	SPRING5	1				
012		PR00000389	INNER COVER	1				
013		PR00000293	TAPPING SCREW ST2.9X10	2				
014		PR00000390	MOTOR ASSEMBLY	1			Y09511	
014-1		PR00000515	MOTOR ASSEMBLY	1	<	Y09511		
015		PR00000391	HEATER ASSEMBLY	1				
016		PR00000392	FRONT COVER ASSEMBLY	1				
017		PR00000393	SPRING 4	1				
018		PR00000394	TRIGGER ASSEMBLY	1				
019		PR00000395	TAPPING SCREW ST2.9X16	8				
020		PR00000379	HOUSING ASSEMBLY	1				
	D10		INC. 1					
A03A		PR00000404	PLASTIC CASE	1				
A03B		PR00000404	PLASTIC CASE	1		Y09452		
A05		PR00000028	GLASS PROTECTION NOZZLE	1				
A06		PR00000029	WIDE-SLOT NOZZLE	1				
A07		PR00000030	REFLECTOR NOZZLE	1				
A08		PR00000031	REDUCTION NOZZLE 20mm	1				
A09B		***DC18RC	DC18RC FAST CHARGER	1		Y09452		
A10B		198013-4	BATTERY BL1850B SET	1		Y09452		
A11B		450128-8	BATTERY COVER	1		Y09452		

A:
B:

Interchange
O : Yes
X : No
< : the new part can be substituted for the current.
> : the current part can be substituted for the new.
S : Interchangeable as a set.