IN	INDIA

Diagram / Parts List

DGD801

CORDLESS DIE GRINDER

2024/05

(IN) DGD801 / CORDLESS DIE GRINDER

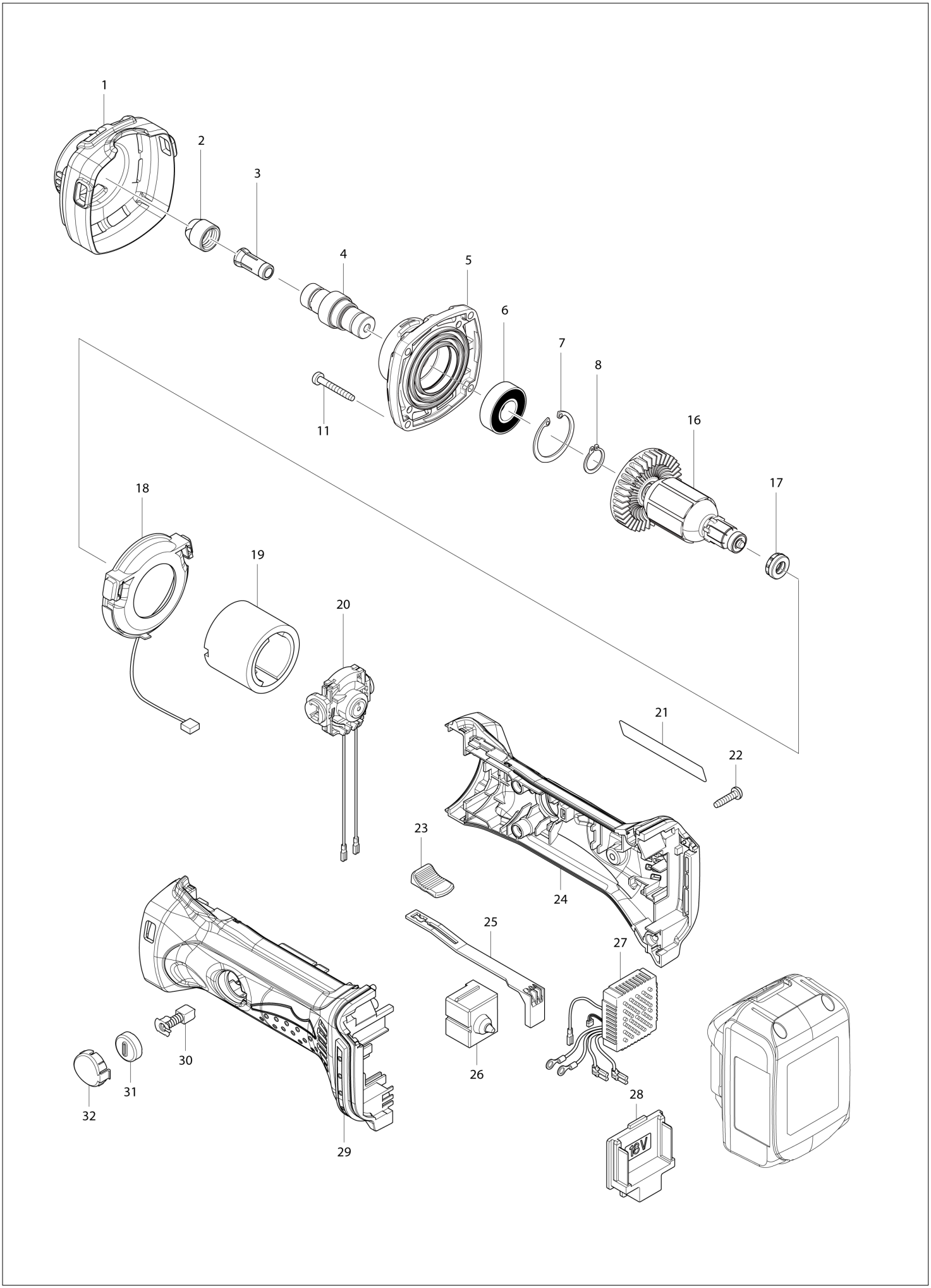

IN	INDIA

DGD801 / CORDLESS DIE GRINDER

Item	Sub	Parts No.	Parts Description	Qty	I/C	E/C No.	Close No.	Remark
001		424381-2	INSULATION COVER	1				
002		763668-0	COLLET NUT	1				
003		763670-3	COLLET CONE 6	1				
004		326011-0	SPINDLE	1				
005		140091-0	BEARING BOX COMPLETE	1				
	C10	262118-7	FELT RING 18	1				
006		211237-6	BALL BEARING 6002LLB	1				
007		962151-6	RETAINING RING R-32	1				
008		961055-9	RETAINING RING S-15	1				
011		266324-6	TAPPING SCREW 4X22	4				
016		619285-3	ARMATURE	1				
	D10		INC. 17					
017		421977-0	RUBBER RING 13	1				
018		631714-6	LED CIRCUIT	1				
019		638627-2	YOKE UNIT	1				
020		638448-2	ENDBELL COMPLETE	1				
021		815P39-4	DGD801 NAME PLATE	1		A2314		
022		266326-2	TAPPING SCREW 4X18	5				
023		419566-3	SWITCH KNOB	1				
024		187839-9	HOUSING SET	1				
	C10	263005-3	RUBBER PIN 6	2				
	D10		INC. 29					
025		419519-2	SWITCH LEVER	1				
026		650579-7	SWITCH 1246.3223	1				
027		620243-4	CONTROLLER	1			Y09328	
027-1		620G22-2	CONTROLLER	1	<	Y09328		
028		644808-8	TERMINAL	1				
029		187839-9	HOUSING SET	1				
	C10	263005-3	RUBBER PIN 6	2				
	D10		INC. 24					
030		191971-3	CARBON BRUSH CB-430	1				
031		643929-3	BRUSH HOLDER CAP	2				
032		419518-4	HOLDER CAP COVER	2				
A01		781039-9	WRENCH 13	2				
A02		763671-1	COLLET CONE 8	1			DU768	

B:DGD801Z(N)

Interchange
O : Yes
X : No
< : the new part can be substituted for the current.
> : the current part can be substituted for the new.
S : Interchangeable as a set.