IN	INDIA

Diagram / Parts List

DML815

CORDLESS FLASHLIGHT

2022/11

(IN) DML815 / CORDLESS FLASHLIGHT

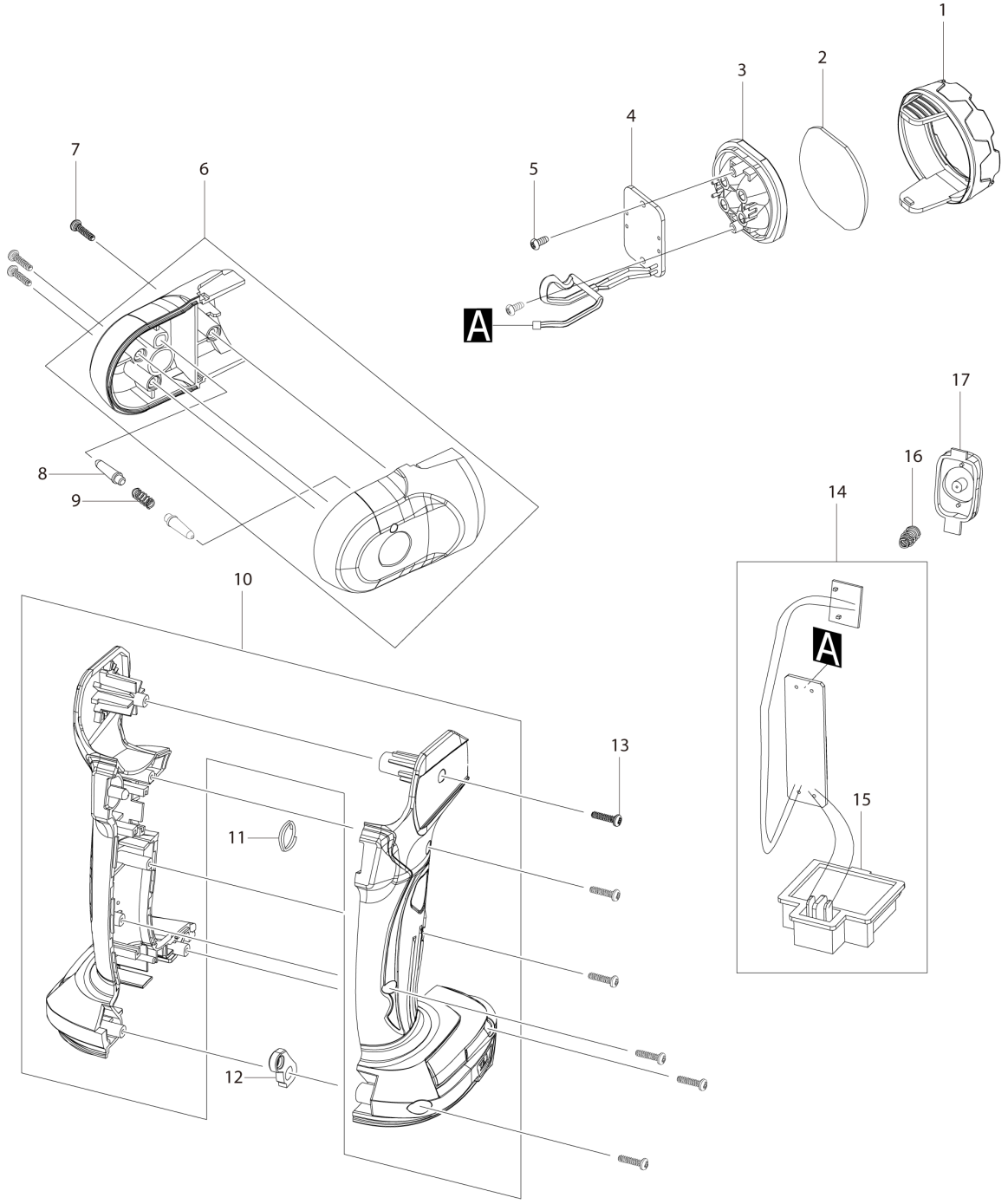

IN	INDIA

DML815 / CORDLESS FLASHLIGHT

Item	Sub	Parts No.	Parts Description	Qty	I/C	E/C No.	Close No.	Remark
001		GM00001299	BEZEL(C1720802002)	1				
002		GM00001298	LENS(C1720802001)	1				
003		GM00002074	REFLECTOR	1				
004-1		GM00002243	LED PCBA ASSY (CE)	1				
005		GM00001332	SCREW 3 X 8 PB	2				
006		GM00002076	HEAD HOUSING ASSY	1				
007		GM00001333	SCREW 3 X 12PB B0130120702	3				
008		GM00001295	LOCKING SHAFT(C4120802001)	2				
009		GM00001294	COMPRESSION SPRING B1303802922	1				
010		GM00001303	HOUSING L/R(G0180200400)	1				
011		GM00001292	RING (B3103184009)	1				
012-1		GM00002285	HOOK PLATE	1				
013		GM00001333	SCREW 3 X 12PB B0130120702	6				
014		GM00002078	MAIN PCBA ASSY	1				
	D10		INC. 15					
015		GM00001117	BATTERY HOLDER C2010239007	1				
016		GM00002077	SPRING	1				
017		GM00001291	SWITCH COVER(G0180200200)	1				
A01		GM00001289	HOOK BAND SET(G0180200100)	1				

A:

Interchange
O : Yes
X : No
< : the new part can be substituted for the current.
> : the current part can be substituted for the new.
S : Interchangeable as a set.