Model No. M9202 125MM RANDOM ORBIT SANDER

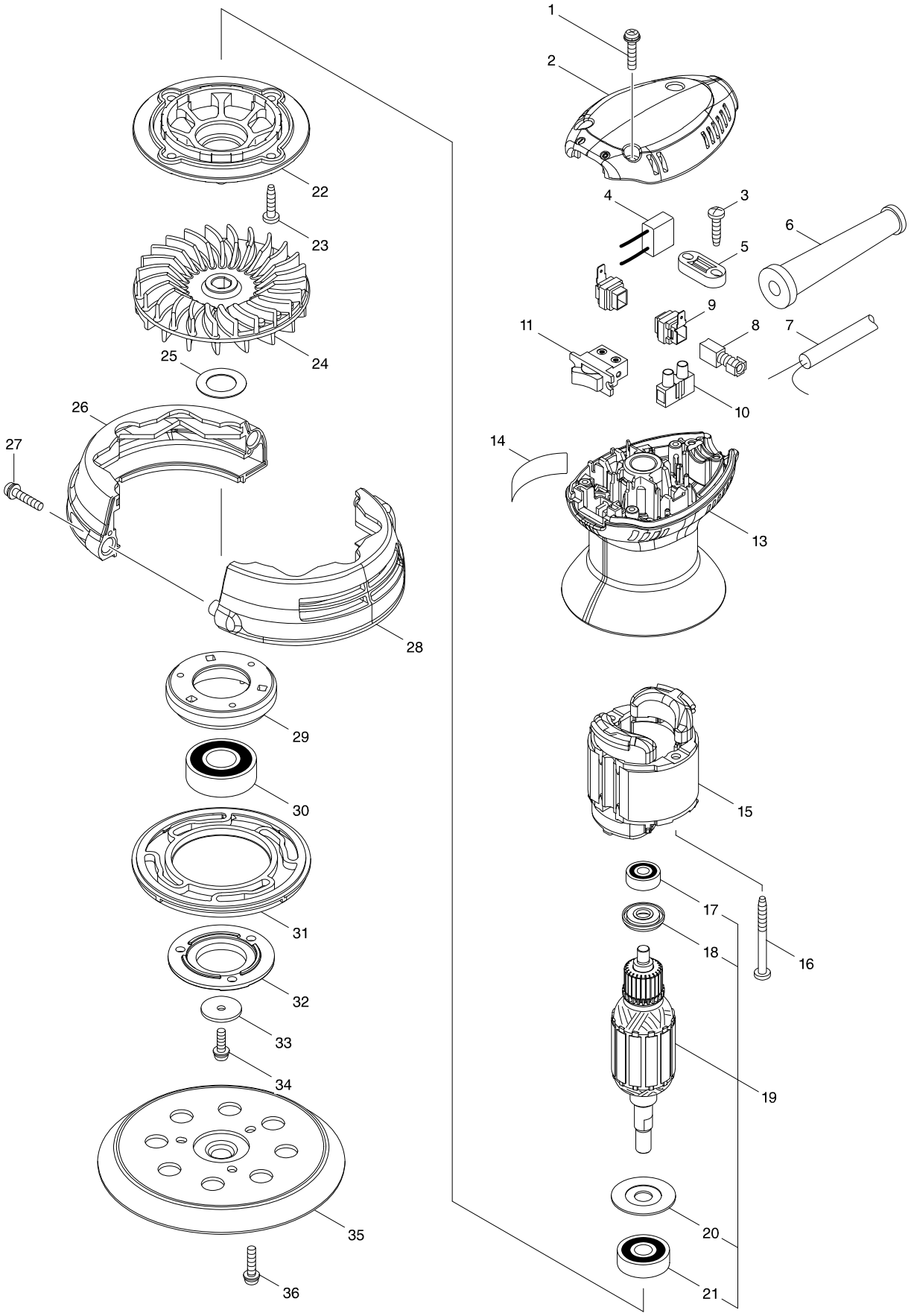

Model No. M9202 125MM RANDOM ORBIT SANDER

Item	Parts No.	Description	I/C	Qty	N/O	Opt. 1	Opt. 2	Note
001	266326-2	TAPPING SCREW 4X18		3		73181500		
002	450869-6	TOP COVER		1		84679900		
003	266326-2	TAPPING SCREW 4X18		2		73181500		
005	687123-7	STRAIN RELIEF		1		84679900		
006	682569-2	CORD GUARD 8-85		1		73182990		
007	666053-5	POWER SUPPLY CORD 1.0-2-2.0		1		85442090		
008	191962-4	CARBON BRUSH CB-419		1		85452000		
009	643995-0	BRUSH HOLDER		2		82078000		
010	654532-5	TERMINAL BLOCK 1P		1		73182990		
011	651527-9	SWITCH		1		85366990		
013	456015-9	MOTOR HOUSING		1		84679900		
014	851A59-4	M9202 NAME PLATE		1				
015	633688-7	FIELD 220-240V		1		85030090		
016	266425-0	TAPPING SCREW 4X45		2		73181500		
017	210028-2	BALL BEARING 606ZZ		1		84821090		
018	681675-0	INSULATION WASHER		1				
019	510251-2	ARMATURE ASS'Y 220-240V		1				
D10		INC. 17,18,20,21						
020	267806-1	WASHER 9		1		73182200		
021	211092-6	BALL BEARING 629DDW		1		84821090		
022	450672-5	BRACKET		1		84679900		
023	266326-2	TAPPING SCREW 4X18		4		73181500		
024	241673-2	FAN 88		1		84145190		
025	267164-5	FLAT WASHER 15		1		73182200		
026	188622-7	SKIRT SET		1		84679900		
D10		INC. 28						
027	265107-1	PAN HEAD SCREW M4X20		2		73181500		
028	188622-7	SKIRT SET		1		84679900		
D10		INC. 26						
029	318304-9	BEARING BOX		1		84833000		
030	211228-7	BALL BEARING 6202DDW		1		84821090		
031	424131-5	BRAKE RING		1		40169390		
032	318303-1	BEARING BOX COVER		1		84833000		
033	253739-6	FLAT WASHER 4		1		84679900		
034	265099-4	PAN HEAD SCREW M4X14		1		73181500		
035	743081-8	PAD 123		1		40169390		
036	265112-8	+PAN HEAD SCREW M4X18		3		73181500		
A01	794544-7	ABRASIVE DISC 125 #120		1				

Please order the parts with a part number.

Print Date