Model No. M6501 6.5MM HIGH SPEED DRILL

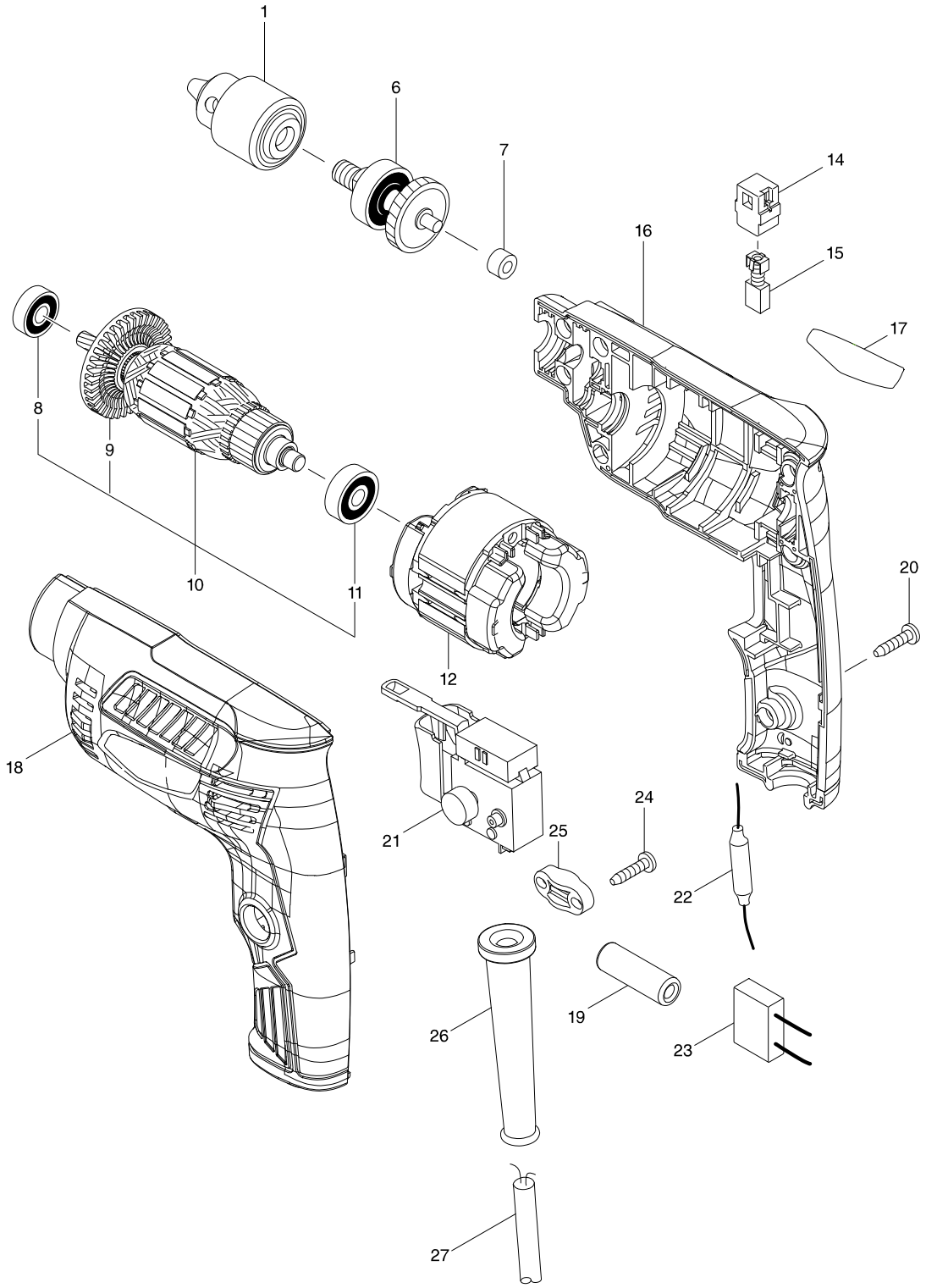

Model No. M6501 6.5MM HIGH SPEED DRILL

Item	Parts No.	Description	I/C	Qty	N/O	Opt. 1	Opt. 2	Note
001	766021-9	DRILL CHUCK 6.5		1		82075000		
006	141951-9	GEAR COMPLETE		1		84679900		
007	214043-8	PLANE BEARING 5		1		84821090		
008	210062-2	BALL BEARING 607ZZ		1	*	84821090		
008-1	211382-7	BALL BEARING 607ZZ	O	1		84821090		
009	240142-0	FAN 44		1		84145190		
010	515879-1	ARMATURE ASS'Y 240V		1		85030090		
D10		INC. 8,9,11						
011	210030-5	BALL BEARING 627ZZ		1	*	84821090		
011-1	210050-9	BALL BEARING 627ZZ	O	1		84821090		
012	633814-8	FIELD 240V		1		85030090		
014	643566-3	BRUSH HOLDER 5X8		2		82078000		
015	191998-3	CARBON BRUSH CB-85		1		85452000		
016-1	183B01-6	HOUSING SET		1	*			
D10		INC. 18			*			
016-2	183F77-7	HOUSING SET	O	1		84679900		
D10		INC. 18						
017	850V56-3	M6501 NAME PLATE		1				
018-1	183B01-6	HOUSING SET		1	*			
D10		INC. 16			*			
018-2	183F77-7	HOUSING SET	O	1		84679900		
D10		INC. 16						
020	266326-2	TAPPING SCREW 4X18		7	*	73181500		
020-1	265652-6	TAPPING SCREW 4X18	O	7				
021	650551-9	SWITCH FA1-3/2BEZ-4		1		85366990		
022	646172-3	CHOKE COIL		1	*			
024	266326-2	TAPPING SCREW 4X18		2	*	73181500		
024-1	265652-6	TAPPING SCREW 4X18	O	2				
025	687123-7	STRAIN RELIEF		1		84679900		
026	682569-2	CORD GUARD 8-85		1		73182990		
027	666257-9	POWER SUPPLY CORD 0.75-2-2.0		1		85442090		
A01	418198-3	KEY HOLDER 9		1		82078000		
A02	763449-2	CHUCK KEY S6		1		84679900		