Model No. M6202 13MM DRILL

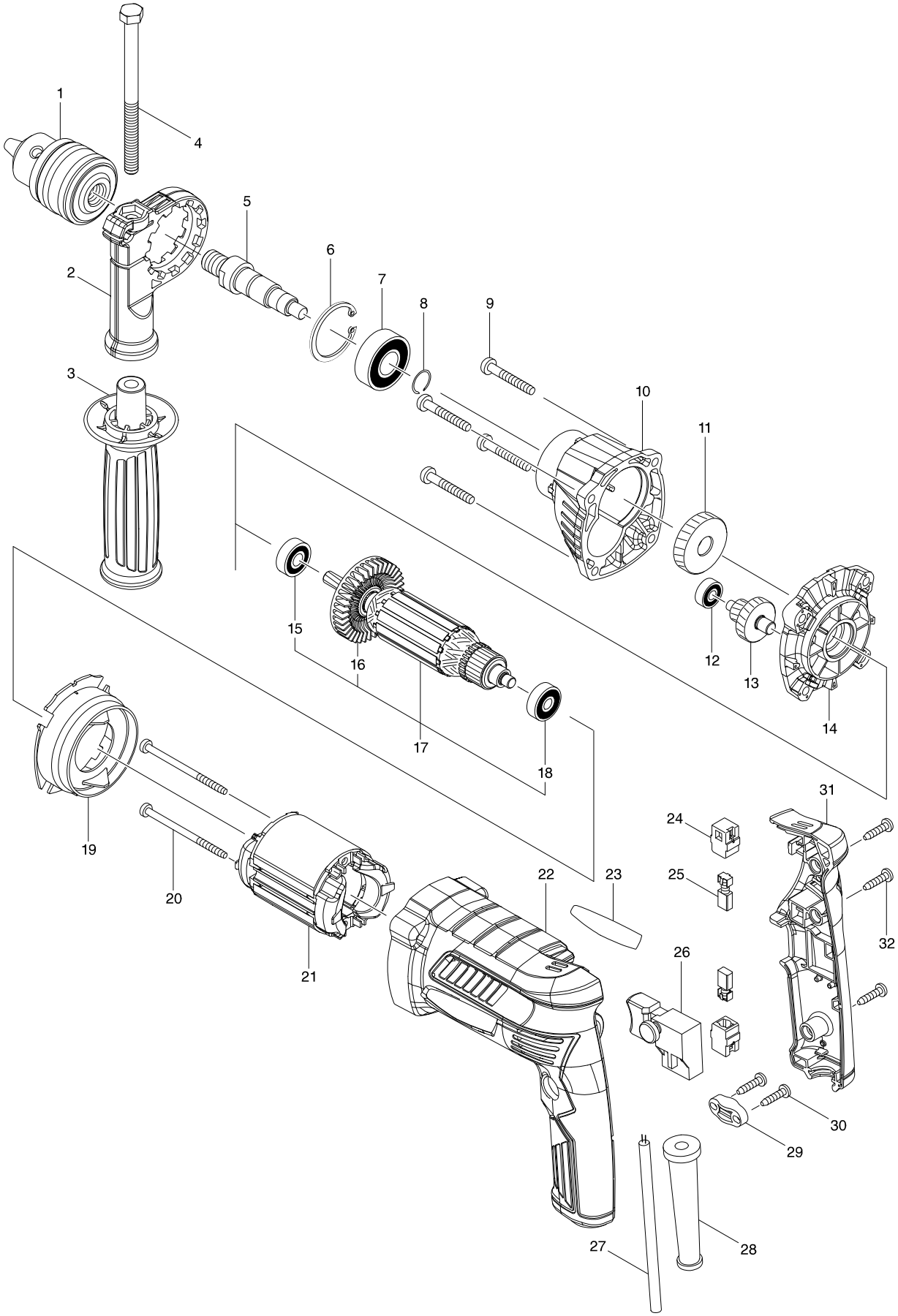

Model No. M6202 13MM DRILL

Item	Parts No.	Description	I/C	Qty	N/O	Opt. 1	Opt. 2	Note
002	417630-4	GRIP BASE		1		84679900		
003	142083-5	GRIP 36 COMPLETE		1		40169390		
004	265495-6	HEX. BOLT M8X110		1		73181500		
005	326265-9	SPINDLE		1		84679900		
006	962153-2	RETAINING RING R-35		1		73182990		
007	211241-5	BALL BEARING 6202DDW		1		84821090		
008	233925-5	RING SPRING 13		1		73209090		
009	266012-5	TAPPING SCREW 5X35		4		73181500		
010	142082-7	GEAR HOUSING COMPLETE		1		84834000		
011	227775-8	HELICAL GEAR 35		1		84834000		
012	210028-2	BALL BEARING 606ZZ		1		84821090		
013	226159-7	GEAR COMPLETE 11-23		1		84834000		
014	454291-9	GEAR HOUSING COVER		1		84679900		
015	210044-4	BALL BEARING 608DDW		1		84821090		
016	240127-6	FAN 52		1		84145190		
017	515889-8	ARMATURE ASS'Y 240V		1		85030090		
D10		INC. 15,16,18						
018	210045-2	BALL BEARING 627DDW		1		84821090		
019	454292-7	BAFFLE PLATE		1		73182990		
020	266060-4	TAPPING SCREW 4X65		2		73181500		
021	593829-6	FIELD ASS'Y 240V		1		85030090		
C10	654409-4	TERMINAL VR1.25-3.5LB		2				
022	458003-2	MOTOR HOUSING		1		84679900		
023	853R13-6	M6202 NAME PLATE		1				
024	643566-3	BRUSH HOLDER 5X8		2		82078000		
025	191627-8	CARBON BRUSH CB-64		1		85452000		
026	650235-9	SWITCH FA1-6/1B-3		1		85366990		
027	666257-9	POWER SUPPLY CORD 0.75-2-2.0		1		85442090		
028	682569-2	CORD GUARD 8-85		1		73182990		
029	687123-7	STRAIN RELIEF		1		84679900		
030	266326-2	TAPPING SCREW 4X18		2		73181500		
031	458004-0	HANDLE COVER		1		39269099		
032	266326-2	TAPPING SCREW 4X18		3		73181500		
A01	781037-3	WRENCH 17		1		82041120		