Model No. M0600 10MM DRILL

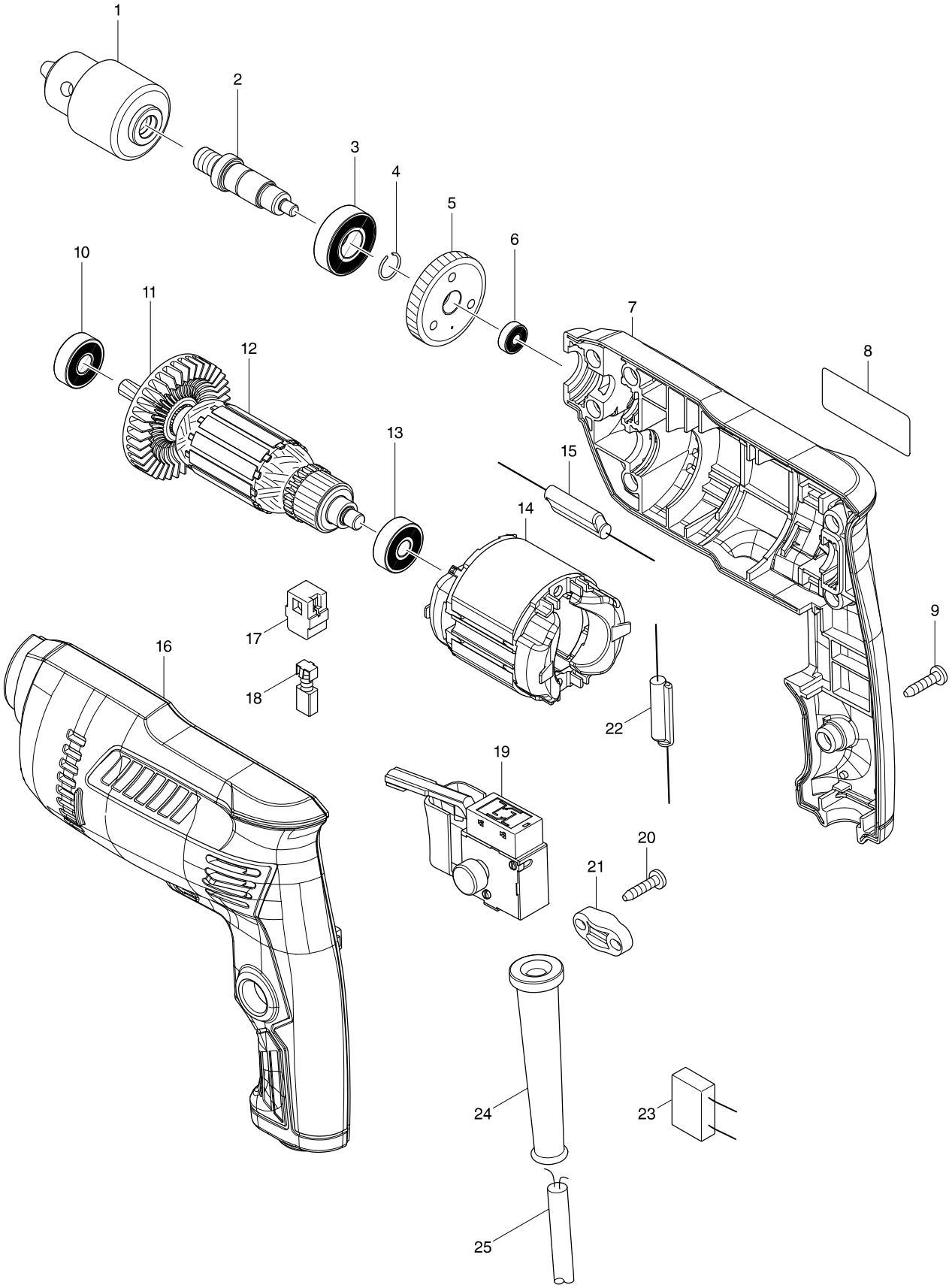

Model No. M0600 10MM DRILL

Item	Parts No.	Description	I/C	Qty	N/O	Opt. 1	Opt. 2	Note
001	766014-6	DRILL CHUCK S10		1		82075000		
002	326025-9	SPINDLE		1		84679900		
003	210119-9	BALL BEARING 6001ZZ		1		84821090		
004	233950-6	RING SPRING 11		1		73209090		
005	227742-3	HELICAL GEAR 35		1		84834000		
006	210137-7	BALL BEARING 606ZZ		1		84821090		
007	183B23-6	HOUSING SET		1		84679900		
D10		INC. 16						
008	851A82-9	M0600 NAME PLATE		1	*			
008-1	851A82-9	M0600 NAME PLATE	O	1				
009	266326-2	TAPPING SCREW 4X18		7	*	73181500		
009-1	265652-6	TAPPING SCREW 4X18	O	7				
010	210046-0	BALL BEARING 608ZZ		1		84821090		
011	240127-6	FAN 52		1		84145190		
012	515834-3	ARMATURE ASS'Y 240V		1		85030090		
D10		INC. 10,11,13						
013	210050-9	BALL BEARING 627ZZ		1		84821090		
014	633844-9	FIELD 240V		1	*	85030090		
014-1	633989-3	FIELD	<	1		85030090		
016	183B23-6	HOUSING SET		1		84679900		
D10		INC. 7						
017	643566-3	BRUSH HOLDER 5X8		2		82078000		
018	191627-8	CARBON BRUSH CB-64		1		85452000		
019	650240-6	SWITCH FA2-4/1BEK		1		85366990		
020	266326-2	TAPPING SCREW 4X18		2	*	73181500		
020-1	265652-6	TAPPING SCREW 4X18	O	2				
021	687123-7	STRAIN RELIEF		1		84679900		
024	682582-0	CORD GUARD		1				
025	666930-1	POWER SUPPLY CORD 0.75-2-2.0		1	*			
025-1	666257-9	POWER SUPPLY CORD 0.75-2-2.0	O	1		85442090		
A01	763447-6	CHUCK KEY S10		1		84679900		