IN

Diagram / Parts List

JV183D

CORDLESS JIG SAW

2020/11

(IN) JV183D / CORDLESS JIG SAW

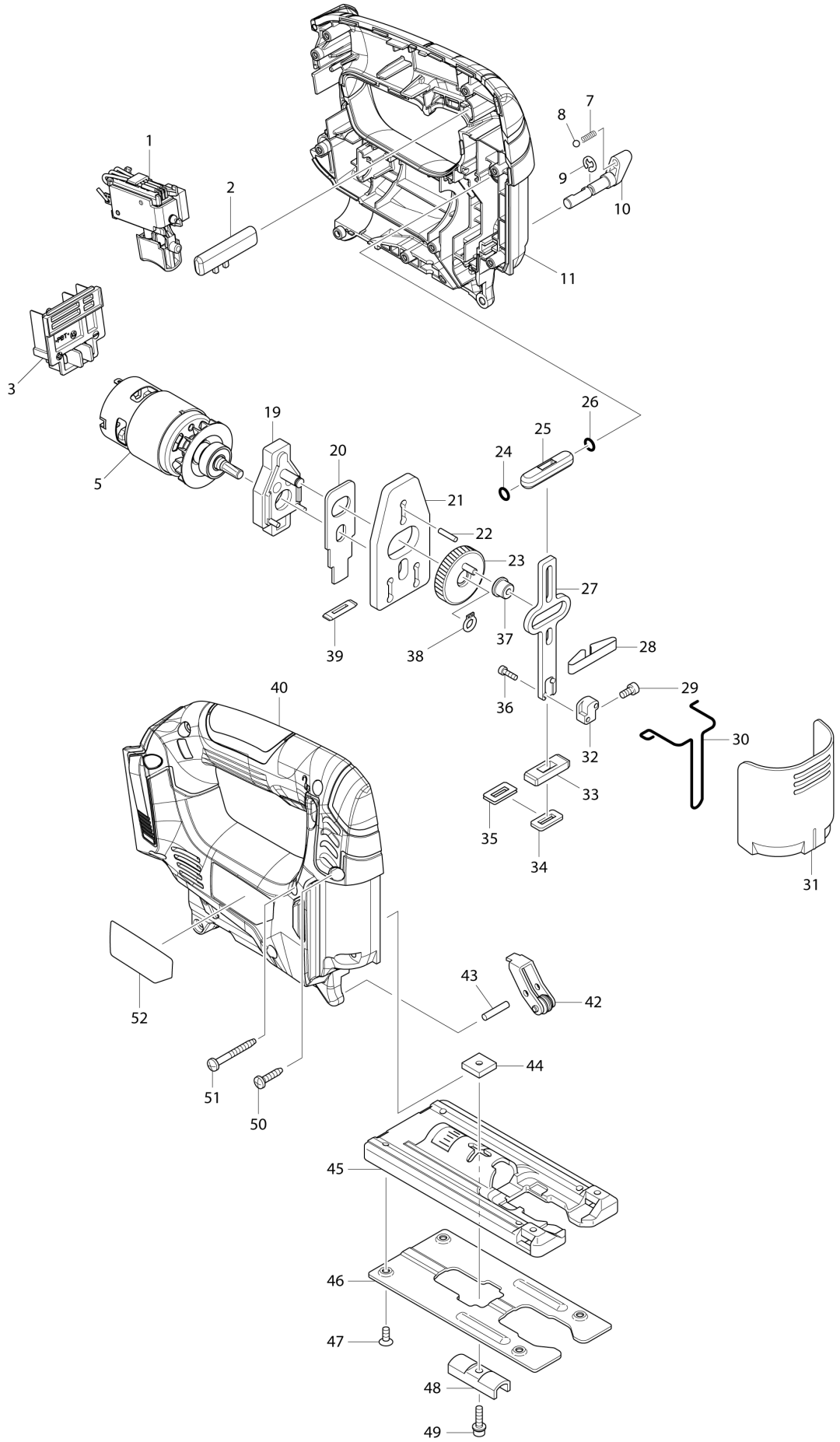

JV183D / CORDLESS JIG SAW

Item	Sub	Parts No.	Parts Description	Qty	I/C	E/C No.	Close No.	Remark
001		632B67-8	SWITCH UNIT	1				
002		454742-2	LOCK OFF BUTTON	1				
003		643862-9	TERMINAL	1				
005		629113-4	DC MOTOR	1				
007		233151-6	COMPRESSION SPRING 4	1				
008		216008-6	STEEL BALL 4	1				
009		961011-9	STOP RING E-4	1				
010		272267-2	LEVER 19	1				
011		187723-8	HOUSING SET	1				
	D10		INC. 40					
019		152600-3	BEARING CASE COMPLETE	1				
020		344683-9	PUSH PLATE	1				
021		344614-8	BALANCE PLATE	1				
022		256254-9	PIN 3	1				
023		153260-4	GEAR COMPLETE	1				
024		213038-8	O RING 5	1				
025		313082-6	SLIDER GUIDE	1				
026		213038-8	O RING 5	1				
027		344613-0	SLIDER	1				
028		232183-0	LEAF SPRING	1				
029		922107-1	HEX. SOCKET HEAD BOLT M4X8	1				
030		323748-0	SAFETY WIRE	1				
031		416476-5	DUST COVER	1				
032		313140-8	BLADE CLAMP	1				
033		313086-8	SLIDER SUPPORT	1				
034		423307-1	POLY URETANE SPONGE SEAL	1				
035		344686-3	SEAL PLATE	1				
036		266177-3	HEX. SOCKET HEAD BOLT M3X10	2				
037		257683-9	COLLAR SLEEVE	1				
038		961002-0	RETAINING RING S-6	1				
039		416703-0	DUST SEAL	1				
040		187723-8	HOUSING SET	1				
	D10		INC. 11					
042		158392-2	RETAINER COMPLETE	1				
043		256117-9	PIN 4	1				
044		343540-8	HOLDER	1				
045		317796-9	BASE	1				
046		345441-6	BASE PLATE	1				
047		912107-9	COUNTERSUNK HEAD SCREW M4X8	4				
048-1		344685-5	CLAMP PLATE	1				
049		922128-3	HEX. SOCKET HEAD BOLT M4X16	1				
050		266326-2	TAPPING SCREW 4X18	9				
051		266351-3	TAPPING SCREW 4X35	1				
052		815D85-5	JV183D NAME PLATE	1				
A01		A-85628	JIGSAW BLADE NO.B10	1				
A02		783201-2	HEX. WRENCH 3	1				
A03B		***DC18WA	DC18WA BATTRY CHARGER	1				
A04B		199363-0	BATTERY BL1815G SET	1				
A06B		821646-7	PLASTIC CARRYING CASE	1				
	C10	162315-4	LATCH	2				
	C20	452137-3	HANDLE	1				
A07B		819D96-2	JV183DW PLASTIC CASE LABEL	2				

B:JV183DW(H)

Interchange
O : Yes
X : No
< : the new part can be substituted for the current.
> : the current part can be substituted for the new.
S : Interchangeable as a set.