Model No. HP457D CORDLESS HAMMER DRIVER DRILL

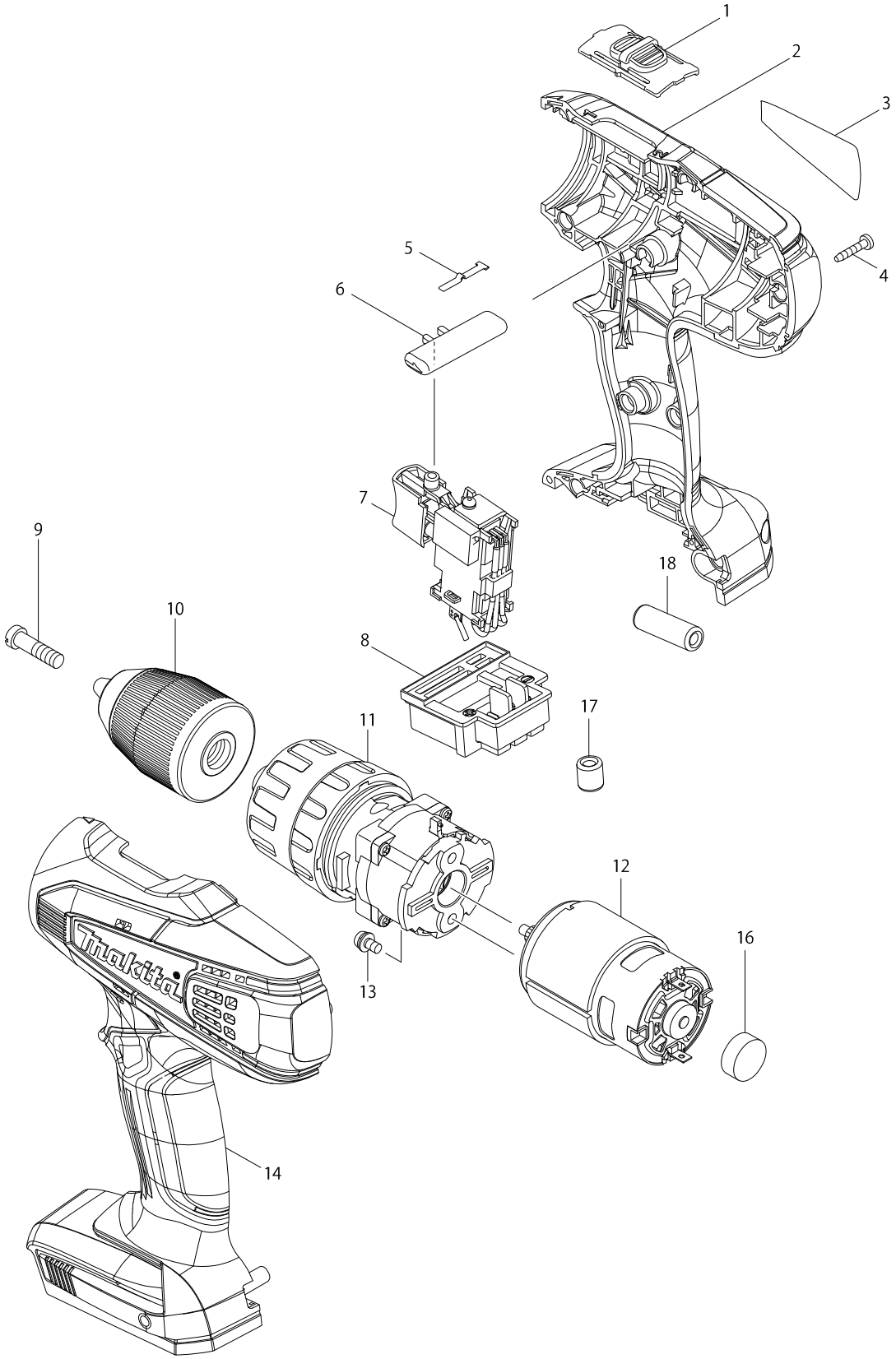

Model No. HP457D CORDLESS HAMMER DRIVER DRILL

Item	Parts No.	Description	I/C	QTY	N/O	Opt. 1	Opt. 2	NOTE
001	125310-5	SPEED CHANGE LEVER ASS'Y		1		84679900		
C10	231433-0	COMPRESSION SPRING 4		2		73209090		
002	187026-0	HOUSING SET		1		84679900		
D10		INC. 14						
003	869392-4	HP457D NAME PLATE		1		83100090		
004	266429-2	TAPPING SCREW 3X16		9		73181500		
005	232182-2	LEAF SPRING		1		73209090		
006	452399-3	F/R CHANGE LEVER		1		73182990		
007	638887-6	SWITCH UNIT		1		85366990		
008	643862-9	TERMINAL		1		73182990		
009	251468-5	- FLAT HEAD SCREW M6X22		1		73181500		
010A	766004-9	KEYLESS DRILL CHUCK 13		1	*	82075000		
010-1A	766004-9	KEYLESS DRILL CHUCK 13	O	1		82075000		
010-1C	766004-9	KEYLESS DRILL CHUCK 13		1		82075000		
011A	125485-0	GEAR ASS'Y		1	*	84834000		
011-1A	125485-0	GEAR ASS'Y	O	1		84834000		
011-1C	125485-0	GEAR ASS'Y		1		84834000		
012A	629834-8	DC MOTOR		1	*	85011019		
012-1A	629937-8	DC MOTOR	O	1		85011019		
012-1C	629937-8	DC MOTOR		1		85011019		
013	911108-4	PAN HEAD SCREW M4X8		2		73181500		
014	187026-0	HOUSING SET		1		84679900		
D10		INC. 2						
016	421940-3	CAP		1		40169390		
A01	784636-0	+- BIT 2-65		1		82075000		
A02A	***DC18WA	DC18WA BATTRY CHARGER		1				
A03A	195454-5	BATTERY BL1811G SET		2	*	85076000		
A03-1A	196367-3	BATTERY BL1813G SET	O	2	*	85076000		
A03-2A	196367-3	BATTERY BL1813G SET	O	2	*	85076000		
A03-3A	198186-3	BATTERY BL1815G SET	<	2	*			
A03-4A	199363-0	BATTERY BL1815G SET	<	2				
A04A	452652-7	BATTERY COVER		1		73182990		
A05A	824981-2	PLASTIC CARRYING CASE		1		39269099		
C10	162315-4	LATCH		2		73182900		
C20	452137-3	HANDLE		1		84679900		
A06A	892780-0	HP457DWE PLASTIC CASE LABEL		2	*	83100090		
A06-1A	806W19-3	HP457DWE PLASTIC CASE LABEL	<	2				

Please order the parts with a part number.

Print Date 26/11/2019