Model No. SK106GD CRDLSS GRN 4P CROSS LINE LASER

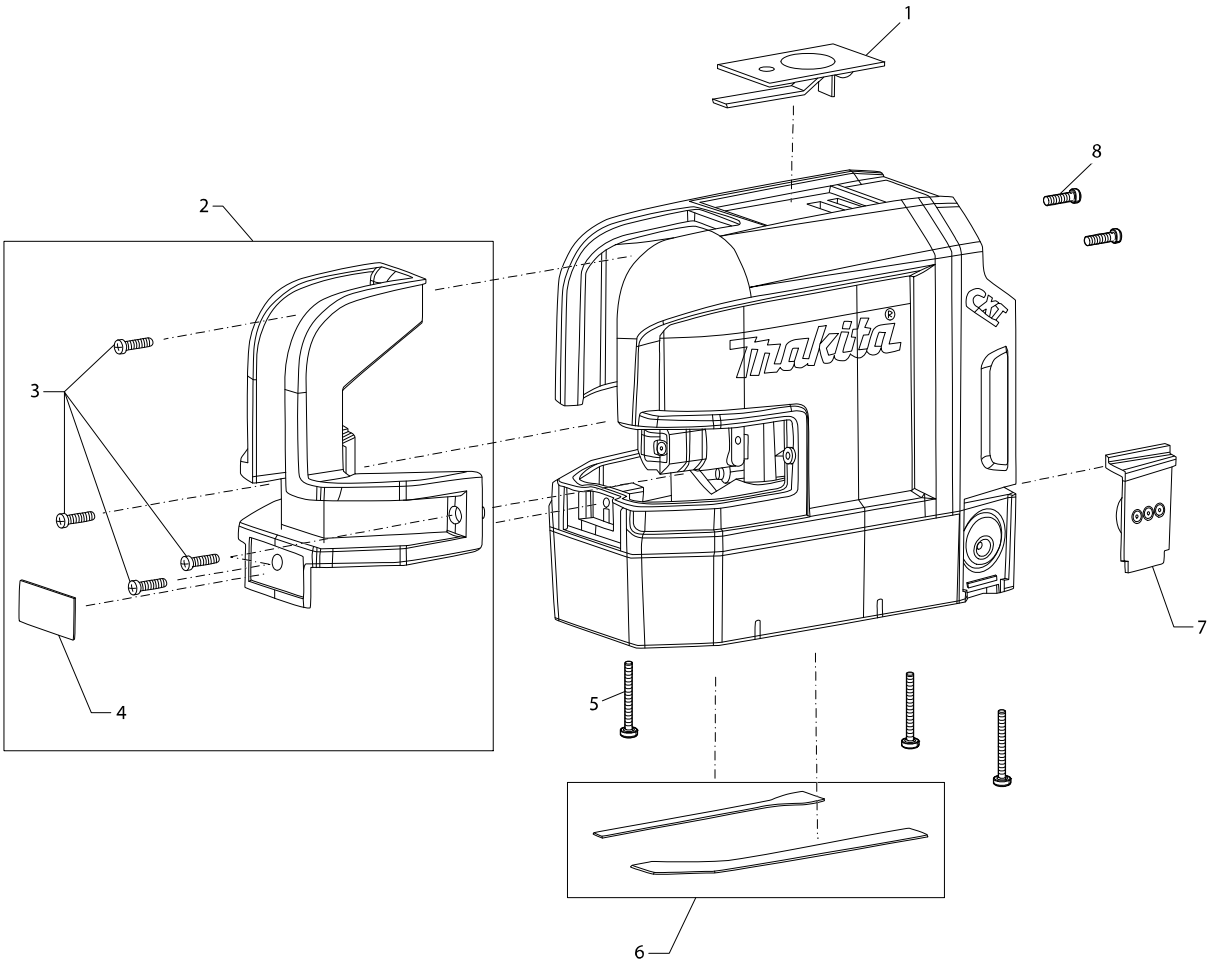

Model No. SK106GD CRDLSS GRN 4P CROSS LINE LASER

Item	Parts No.	Description	I/C	Qty	N/O	Opt. 1	Opt. 2	Note
001	LE00899153	KEYPAD GREEN		1				
002	LE00870265	WINDOW FRAME SET.(SK106GD)		1				
D10		INC. 3,4						
003	LE00899157	SCREW(10PCS.)		1				
004	LE00855687	FRONT LABEL(SK106GD)		1				
005	LE00899156	SCREW FOR BOTTOM HOUSING(10P)		1				
006	LE00870260	BASE LABEL SET		1				
007	LE00873680	DC JACK COVER		1				
008	LE00899157	SCREW(10PCS.)		1				
A01	LE00854451	PRO L-ADAPTER		1	*			
A01-1	LE00870134	PRO L-ADAPTER	<	1				
A02	LE00864505	HOLSTER		1				
A03	LE00823195	TARGET PLATE GREEN		1				
A04	LE00772796	LASER VISIBILITY GLASSESS		1				

Please order the parts with a part number.

Print Date