Model No. DVP180 CORDLESS VACUUM PUMP

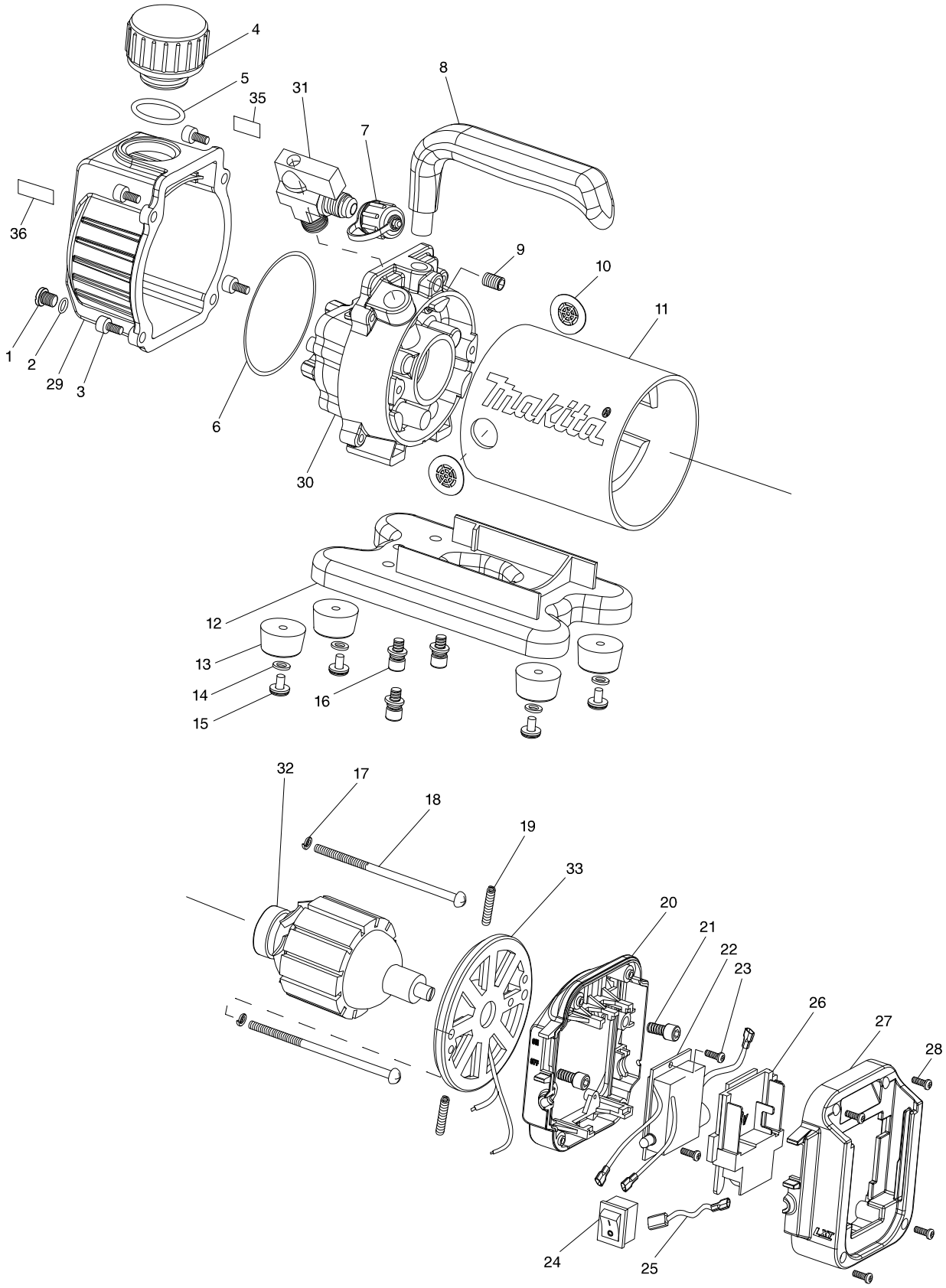

Model No. DVP180 CORDLESS VACUUM PUMP

Item	Parts No.	Description	I/C	QTY	N/O	Opt. 1	Opt. 2	NOTE
001	AS000VP009	DRAIN PLUG M8X12		1		40169390		
002	AS000VP010	O-RING 10X2.5		1		40169320		
003	AS000VP011	HEXAGON BOLT M5X16		4		73181500		
004	AS000VP012	OIL FILL/EXHAUST CAP		1		39269099		
005	AS000VP013	O-RING 26X2.2		1		40169320		
006	AS000VP014	O-RING 95X3.1		1		40169320		
007	AS000VP017	INLET PORT CAP (5/16")		1		39269099		
008	AS000VP018	HANDLE		1		84679900		
009	AS000VP019	HEXAGON BOLT M5X8		1		73181500		
010	AS000VP020	INLET PORT CAP		2		39269099		
011	AS00VP021M	MOTOR HOUSING		1		84679900		
012	AS000VP022	BASE		1		84679900		
013	AS000VP023	RUBBER BASE		4		40169390		
014	AS000VP024	WASHER 4.5X12X1.0		4		73182200		
015	AS000VP025	TAPPING SCREW M4X1		4		73181500		
016	AS000VP026	HEXAGON BOLT (W/WAHSER) M5X16		3		73181500		
017	AS000VP027	SPRING WASHER M5		2		73182200		
018	AS000VP028	PAN HEAD SCREW M5X100		2		73181500		
019	AS000VP029	CARBON BRUSH SPRING		2		73209090		
020	AS000VP030	BATTERY HOLDER (FRONT)		1		82078000		
021	AS000VP033	HEXAGON BOLT M5X10		2	*	73181500		
021-1	AS000VP066	HEXAGON BOLT M5X12	<	2				
022	AS000VP034	CIRCUIT BOARD		1		84679900		
023	AS000VP035	TAPPING SCREW M3X10		2		73181500		
024	AS000VP036	POWER SWITCH		1		85366990		
025	AS000VP037	LEAD WIRE		1		84679900		
026	643899-6	TERMINAL		1		85369090		
027	AS00VP039K	BATTERY HOLDER (REAR)		1		82078000		
028	AS000VP035	TAPPING SCREW M3X10		4		73181500		
029	AS0VP008MK	OIL TANK ASS'Y		1		84679900		
030	AS00VP015M	PUMP ASS'Y		1		84133090		
031	AS000VP016	INTAKE SHUT-OFF VALVE		1		84818090		
032	AS000VP031	ARMATURE		1		85030090		
033	AS000VP032	MOTOR COVER (REAR)		1		84679900		
C10	AS000VP071	WIRE KIT AND BRUSH		1				
035	AS00SS0306	CAUTION LABEL (OIL)		1		39199090		
036	AS00SS0305	CAUTION LABEL (HEAT)		1		39199090		
A02	AS0Y06110K	ADAPTER		1		85369090		
A03	AS00XP808M	VACUUM GAUGE		1		90314900		
A04	AS000AI158	HOSE PACKING (6 PCS)		1				

Please order the parts with a part number.

Print Date 26/11/2019