Model No. DP2010 6.5MM HIGH SPEED DRILL

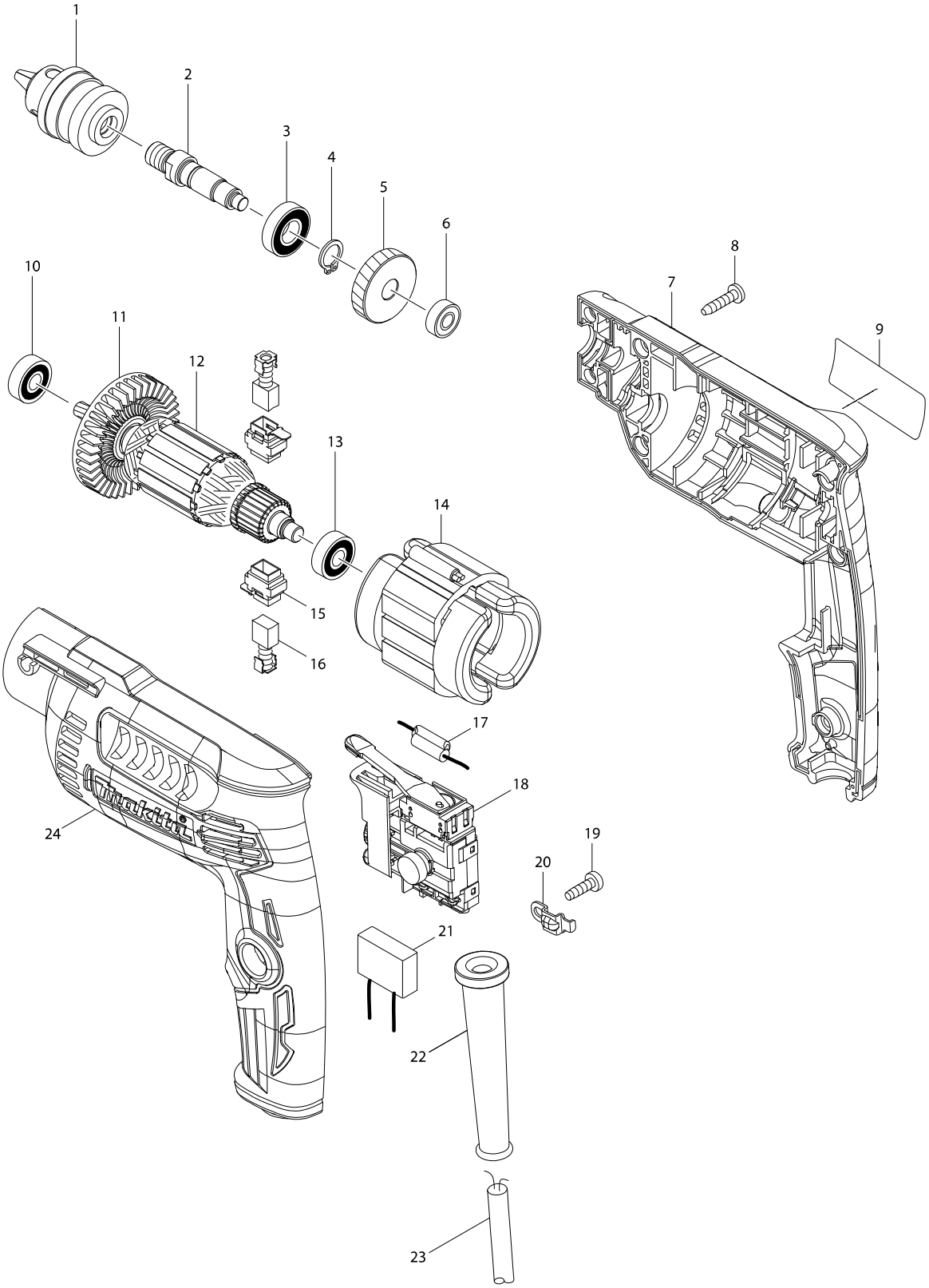

Model No. DP2010 6.5MM HIGH SPEED DRILL

Item	Parts No.	Description	I/C	QTY	N/O	Opt. 1	Opt. 2	NOTE
001	763077-3	DRILL CHUCK 6.5		1		82075000		
002	326280-3	SPINDLE		1		84679900		
003	210087-6	BALL BEARING 6900LLB		1		84821090		
004	961006-2	RETAINING RING S-10		1		73182990		
005	227776-6	HELICAL GEAR 34		1		84679900		
006	210033-9	BALL BEARING 696ZZ		1		84821090		
007	187620-8	HOUSING SET		1		84679900		
C10	252175-3	HEX. NUT M5		1		73181500		
D10		INC. 24						
008	266326-2	TAPPING SCREW 4X18		7		73181500		
009	814K58-7	DP2010 NAME PLATE		1				
010	210017-7	BALL BEARING 607DDW		1		84821090		
011	240066-0	FAN 52		1		84145190		
012	517694-9	ARMATURE ASS'Y 240V		1		85030090		
D10		INC. 10,11,13						
013	210062-2	BALL BEARING 607ZZ		1		84821090		
014	527078-3	FIELD ASS'Y 240V		1		85030090		
C10	654069-2	RECEPTACLE		1		84679900		
015	643936-6	BRUSH HOLDER		2		82078000		
016	191962-4	CARBON BRUSH CB-419		1		85452000		
018	650706-6	SWITCH		1		85366990		
019	266385-6	TAPPING SCREW 4X14		1		73181500		
020	687681-3	STRAIN RELIEF		1		84679900		
022	682569-2	CORD GUARD 8-85		1		73182990		
023	666053-5	POWER SUPPLY CORD 1.0-2-2.0		1		85442090		
024	187620-8	HOUSING SET		1		84679900		
C10	252175-3	HEX. NUT M5		1		73181500		
D10		INC. 7						
A01	418198-3	KEY HOLDER 9		1		82078000		
A02	763418-3	CHUCK KEY S10		1		84679900		

Please order the parts with a part number.

Print Date 27/11/2019