Model No. DML808 CORDLESS LED FLASH LIGHT

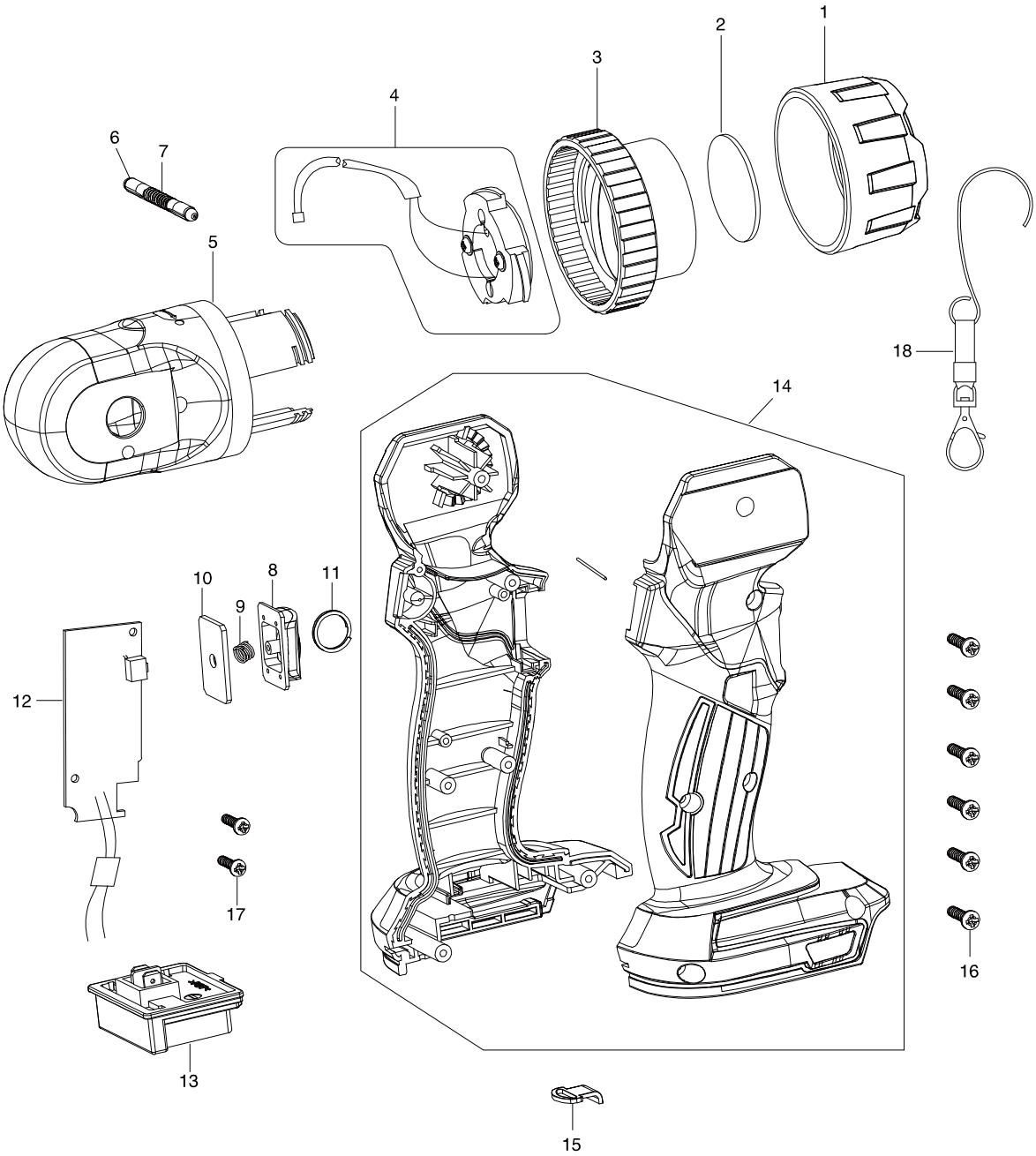

Model No. DML808 CORDLESS LED FLASH LIGHT

Item	Parts No.	Description	I/C	Qty	N/O	Opt. 1	Opt. 2	Note
001	GM00001964	PLASTIC BEZEL		1				
002	GM00001963	SEMI-CONVEX LENS		1				
003	GM00001962	METAL FOCUSING RING		1				
004	GM00001961	LED PCBA ASSY		1				
005	GM00001960	AL HEAD BODY ASSY		1				
006	GM00001704	KNOCK SHAFT C4120105001		2				
007	GM00001958	KNOCK SHAFT SPRING		1				
008	GM00001711	SWITCH COVER C7420105002		1				
009	GM00001710	SWITCH SPRING B1303105021		1				
010	GM00001709	SW SPRING HOLDER C0120105003		1				
011	SM00000190	RING B3103184009		1		73182990		
012	GM00001957	MAIN PCBA ASSY		1				
013	GM00001457	BATTERY HOLDER ROS88070009		1				
014	GM00001956	HOUSING L/R ASSY		1				
015	GM00001459	METAL STRAP HOOK B2808807021		1				
016	GM00001024	SCREW 3X12 B0130120202		6		73181500		
017	GM00001395	SCREW 2.6X8PB B0126081102		2				
018	GM00001289	HOOK BAND SET(G0180200100)		1				

Please order the parts with a part number.

Print Date