# Model No. DML806  RECHARGEABLE LED FLASHLIGHT

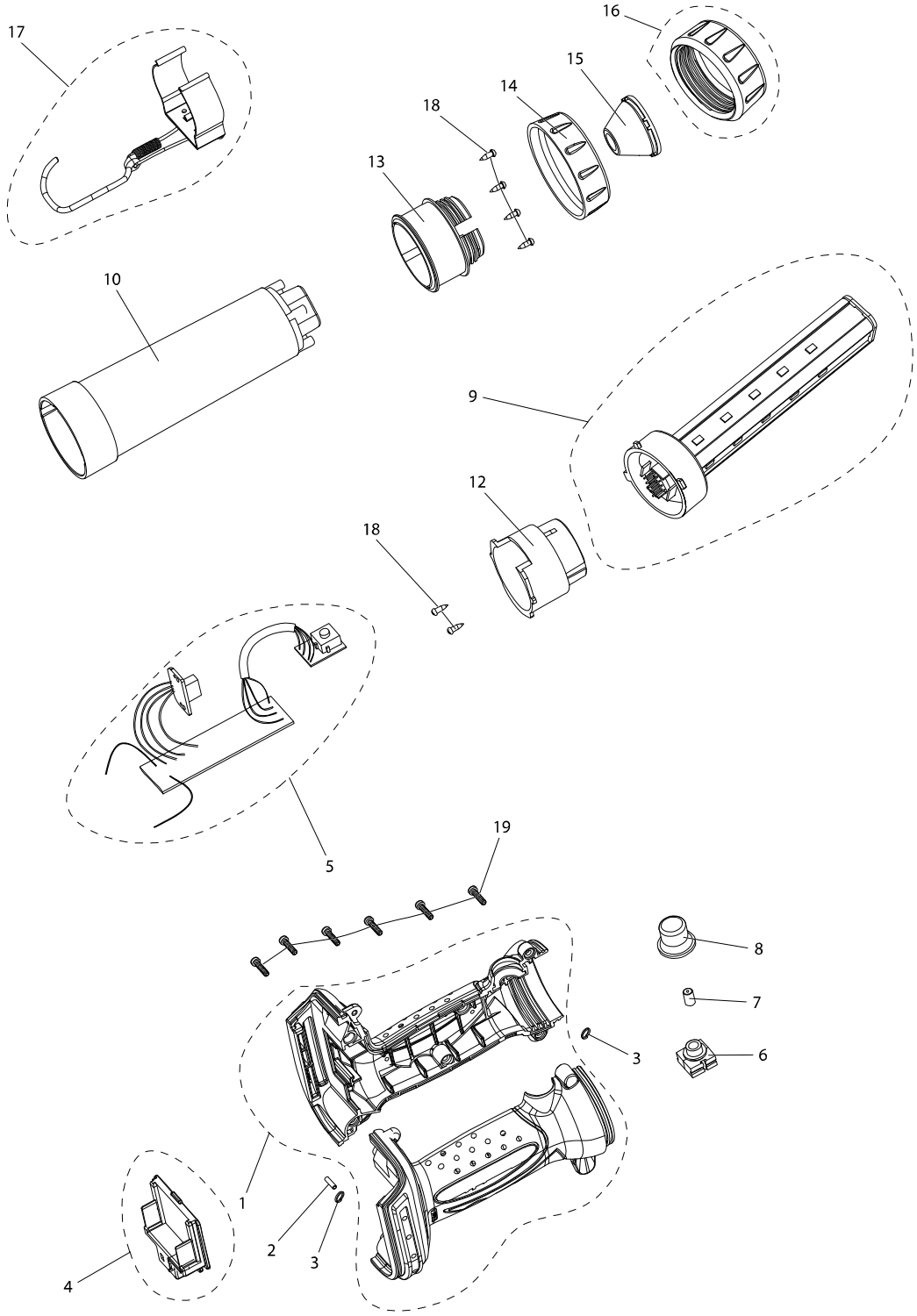

# Model No. DML806 RECHARGEABLE LED FLASHLIGHT



| Item | Parts No. | Description | I/C | Qty | N/O | Opt. 1 | Opt. 2 | Note |
|---|---|---|---|---|---|---|---|---|
| 001 | GM00001382 | HOUSING L/R | | 1 | | | | |
| 002 | GM00001383 | METAL PIN | | 1 | | | | |
| 003 | SM00000190 | RING B3103184009 | | 2 | | 73182990 | | |
| 004 | GM00001117 | BATTERY HOLDER C2010239007 | | 1 | | | | |
| 005A | GM00001384 | MAIN PCBA ASS'Y | | 1 | * | | | |
| 005-1A | GM00001431 | MAIN PCBA ASS'Y | X | 1 | | | | |
| 005-1B | GM00001431 | MAIN PCBA ASS'Y | | 1 | | | | |
| 006 | GM00001385 | SWITCH HOLDER | | 1 | | | | |
| 007 | GM00001386 | SWITCH ROD | | 1 | | | | |
| 008 | GM00001387 | SWITCH RUBBER COVER | | 1 | | | | |
| 009 | GM00001388 | LED LAMP TUBE ASS'Y | | 1 | | | | |
| 010 | GM00001389 | DUFFUSING CAP | | 1 | | | | |
| 012 | GM00001391 | LAMP HOLDER | | 1 | | | | |
| 013 | GM00001392 | BULB BRACKET | | 1 | | | | |
| 014 | GM00001019 | LOCK RING 30110184004 | | 1 | | | | |
| 015 | GM00001393 | REFLECTOR | | 1 | | | | |
| 016 | GM00001394 | TORCH LENS ASS'Y | | 1 | | | | |
| 017 | GM00001027 | METAL HOOK | | 1 | | | | |
| 018 | GM00001395 | SCREW 2.6X8PB B0126081102 | | 6 | | | | |
| 019 | GM00001024 | SCREW 3X12 B0130120202 | | 6 | | 73181500 | | |

Please order the parts with a part number.

Print Date