IN

Diagram / Parts List

DJS161

CORDLESS STRAIGHT SHEAR 1.6MM

2020/08

(IN) DJS161 / CORDLESS STRAIGHT SHEAR 1.6MM

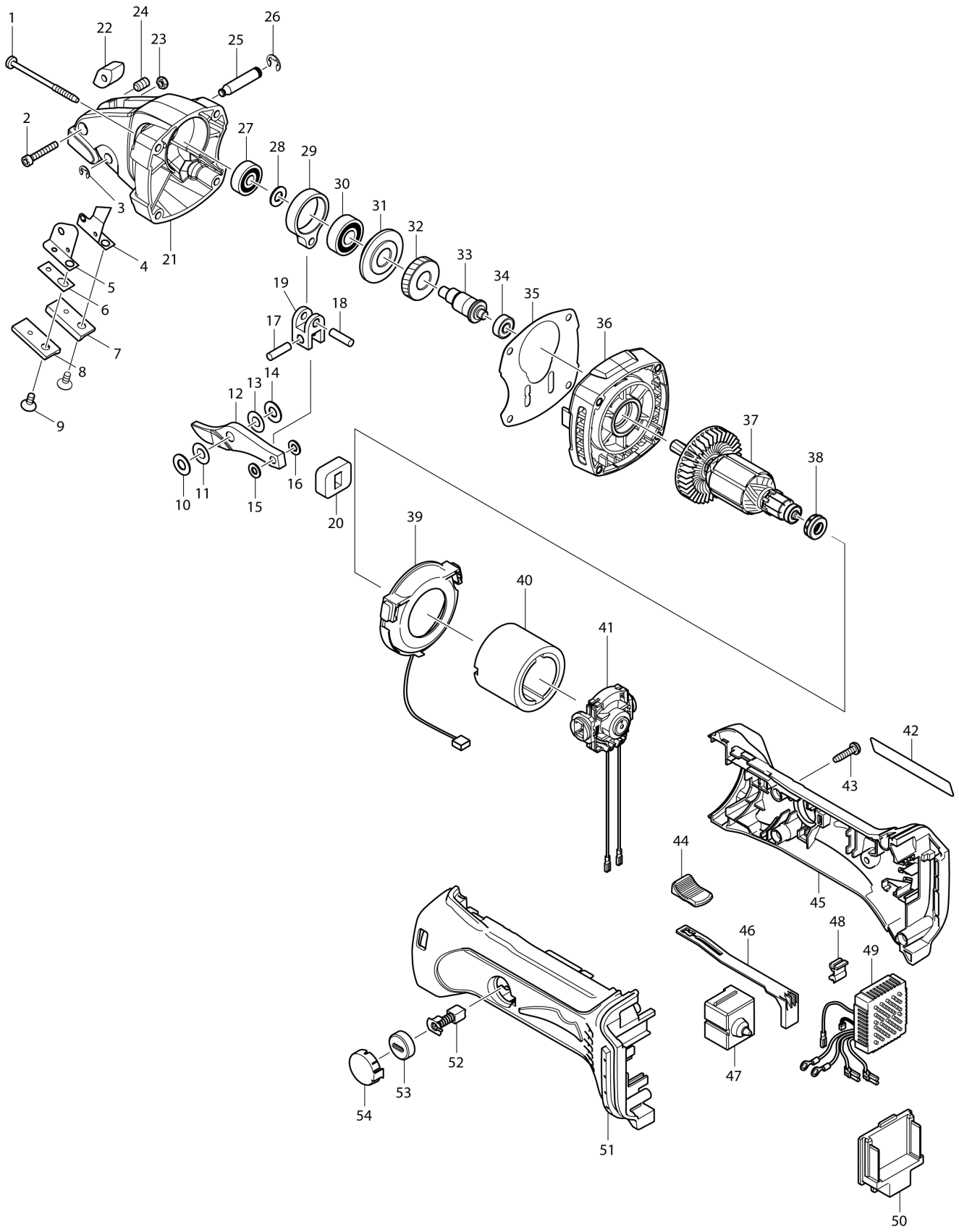

IN	INDIA

DJS161 / CORDLESS STRAIGHT SHEAR 1.6MM

Item	Sub	Parts No.	Parts Description	Qty	I/C	E/C No.	Close No.	Remark
001		266091-3	TAPPING SCREW 4X50	4				
002		922147-9	HEX. SOCKET HEAD BOLT M4X25	1				
003		961011-9	STOP RING E-4	1				
004		346131-4	SLIP PLATE R	1				
005		343480-0	SLIP PLATE L	1				
006		343481-8	SPACER	1				
007		792533-6	SIDE BLADE SET	1				
009		251951-2	HEX. SOCKET HEAD BOLT M5X10	2				
010		261065-9	FLUORORESIN WASHER 7	1			D6230	
010-1		261065-9	FLUORORESIN WASHER 7	1	O	D6230		
011		253338-4	THIN WASHER 7	1				
012		792534-4	CENTER BLADE	1				
013		253338-4	THIN WASHER 7	1				
014		261065-9	FLUORORESIN WASHER 7	1			D6230	
014-1		261065-9	FLUORORESIN WASHER 7	1	O	D6230		
015		267010-2	FLAT WASHER 5	1				
016		267010-2	FLAT WASHER 5	1				
017		256155-1	PIN 5	1				
018		256155-1	PIN 5	1				
019		331329-6	LINK	1				
020		423118-4	DUST COVER	1				
021		140130-6	CRANK HOUSING COMPLETE	1				
022		325727-4	BLOCK	1				
023		252083-8	HEX. LOCK NUT M4-7	1				
024		266085-8	H.S.SET SCREW(FLAT POINT)M6X10	1				
025		256733-7	PIN 7	1				
026		961012-7	STOP RING E-6	1				
027		210023-2	BALL BEARING 627DDW	1				
028		253133-2	FLAT WASHER 7	1				
029		331273-7	ROD	1				
030		210067-2	BALL BEARING 6000ZZ	1				
031		325716-9	SEALING SCREW	1				
032		227716-4	HELICAL GEAR 34	1				
033		325715-1	CRANK SHAFT	1				
034		210033-9	BALL BEARING 696ZZ	1				
035		442150-9	GASKET	1				
036		140131-4	GEAR HOUSING COMPLETE	1				
037		619249-7	ARMATURE	1				
038		421977-0	RUBBER RING 13	1				
039		631714-6	LED CIRCUIT	1				
040		638627-2	YOKE UNIT	1				
041		638448-2	ENDBELL COMPLETE	1				
042		815T27-5	DJS161 NAME PLATE	1				
043		265995-6	TAPPING SCREW 4X18	5				
044		419566-3	SWITCH KNOB	1				
045		187839-9	HOUSING SET	1				
	C10	263005-3	RUBBER PIN 6	2				
	D10		INC. 51					
046		419519-2	SWITCH LEVER	1				
047		650579-7	SWITCH 1246.3223	1				
048		424026-2	CUSHION	1				
049		620243-4	CONTROLLER	1				
050		644808-8	TERMINAL	1				
051		187839-9	HOUSING SET	1				
	C10	263005-3	RUBBER PIN 6	2				
	D10		INC. 45					
052		191971-3	CARBON BRUSH CB-430	1				
053		643929-3	BRUSH HOLDER CAP	2				
054		419518-4	HOLDER CAP COVER	2				
A01		762013-6	THICKNESS GAUGE	1				
A02		783201-2	HEX. WRENCH 3	1				

Interchange
O : Yes
X : No
< : the new part can be substituted for the current.
> : the current part can be substituted for the new.
S : Interchangeable as a set.