Model No. DF012D CORDLESS DRIVER DRILL

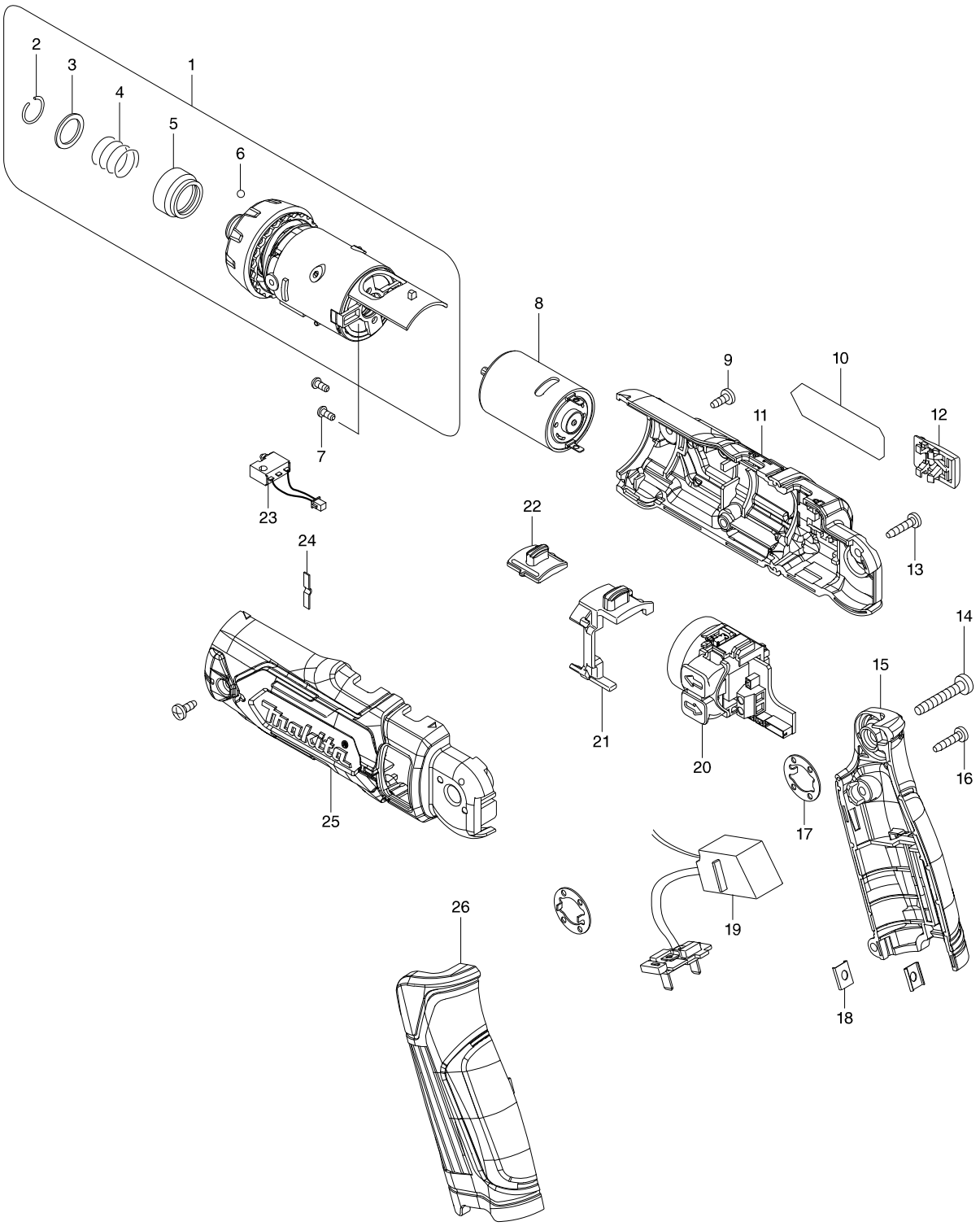

Model No. DF012D CORDLESS DRIVER DRILL

Item	Parts No.	Description	I/C	QTY	N/O	Opt. 1	Opt. 2	NOTE
001	123913-9	GEAR ASSEMBLY		1		84672900		
C10	450558-3	CHANGE RING		1				
D10		INC. 2-6						
002	231965-7	RING SPRING 10		1		73209090		
003	267143-3	FLAT WASHER 11		1		73182200		
004	233005-7	COMPRESSION SPRING 13		1		73209090		
005	324711-6	BIT SLEEVE		1		82079090		
006	216019-1	STEEL BALL 3		2		73182990		
007	265172-0	+PAN HEAD SCREW M2.6X6		2		73181500		
008	629264-3	DC MOTOR		1		85011019		
009	265954-0	TAPPING SCREW BIND PT3X8		2		73181500		
010	853C22-5	DF012D NAME PLATE		1				
011	183F98-9	MOTOR HOUSING SET		1				
D10		INC. 25						
012	450590-7	SLIDE PLATE		1		84679900		
013	266404-8	TAPPING SCREW BIND 3X14		3		73181500		
014	266374-1	TAPPING SCREW 4X25		1		73181500		
015	183G00-8	HANDLE SET		1				
D10		INC. 26						
016	266404-8	TAPPING SCREW BIND 3X14		2		73181500		
017	267803-7	LOCK WASHER		2		73182200		
018	345749-8	SET PLATE		2		73182990		
019	631811-8	CONTROLLER		1		84679900		
020	638605-2	SWITCH UNIT		1		85366990		
021	450553-3	CHANGE LEVER		1		39269099		
022	125465-6	SPEED CHANGE LEVER ASSEMBLY		1		84679900		
C10	233018-8	COMPRESSION SPRING 3		2		73209090		
023	638609-4	SWITCH UNIT		1		85366990		
024	232369-6	LEAF SPRING		1		73209090		
025	183F98-9	MOTOR HOUSING SET		1				
D10		INC. 11						
026	183G00-8	HANDLE SET		1				
D10		INC. 15						
A01	***DC10WA	DC10WA BATTERY CHARGER		1				
D10		COMPO-PARTS						
A02	198005-3	BATTERY BL0715 SET		2				
A03	784202-3	PHILLIPS BIT 2-45		1				
A04	784243-9	+ BIT 1-45		1				
A05	824781-0	PLASTIC CASE		1		39269099		
A06	158775-6	PLASTIC CARRYING CASE COMPLETI		1		39269099		
C10	417724-5	LATCH		2		73182990		
C20	324679-6	SHAFT		1		84831099		

Please order the parts with a part number.

Print Date 27/11/2019