Model No. DF001D IN-LINE CORDLESS SCREWDRIVER

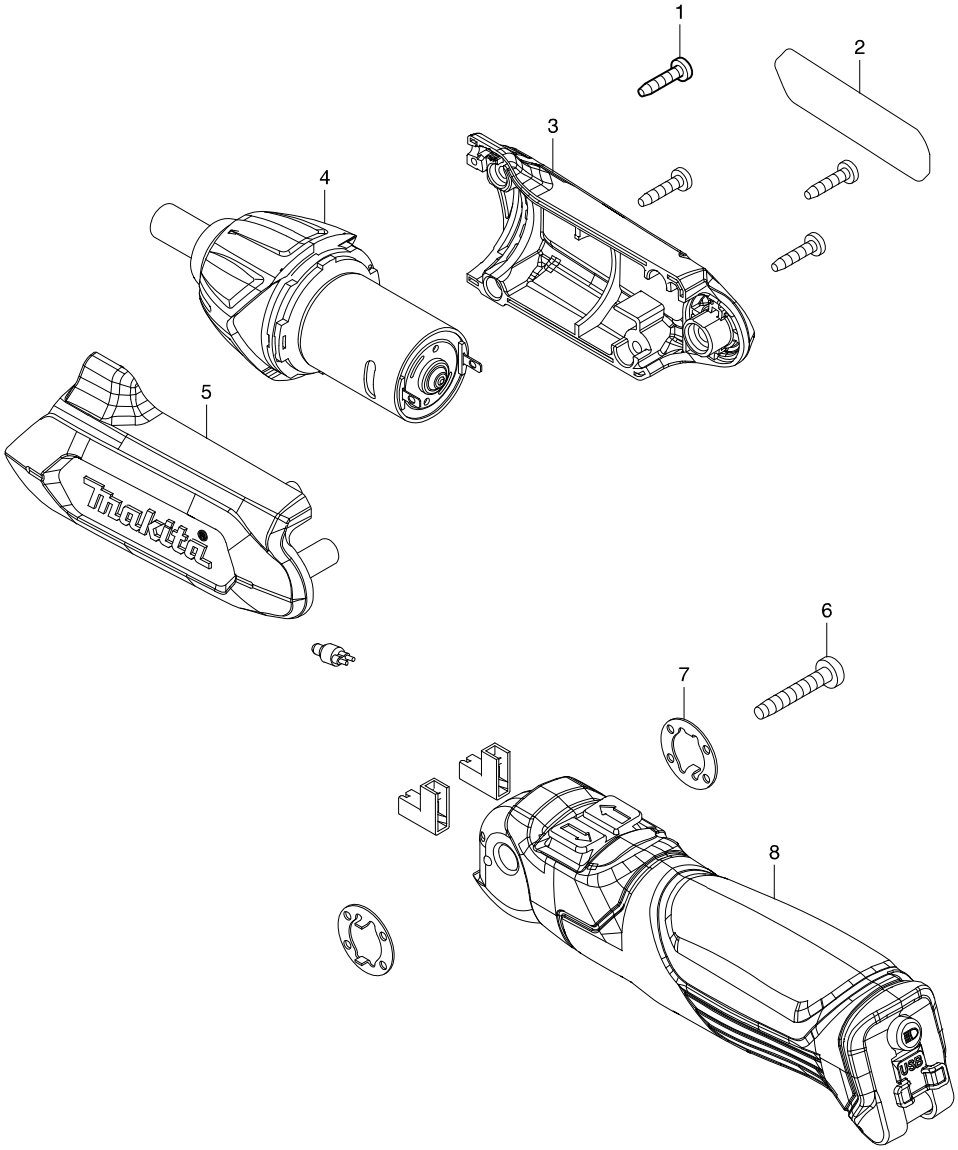

Model No. DF001D IN-LINE CORDLESS SCREWDRIVER

Item	Parts No.	Description	I/C	QTY	N/O	Opt. 1	Opt. 2	NOTE
001	266404-8	TAPPING SCREW BIND 3X14		4		73181500		
002	852X12-1	DF001D NAME PLATE		1				
003	183F38-7	MOTOR HOUSING SET		1				
D10		INC. 5						
004	123911-3	GEAR ASSY(NON EMC COMPLIANT)		1				
C10	221532-6	SPUR GEAR 20B		3				
C20	221531-8	MOTOR PINION		1				
C30	629246-5	DC MOTOR		1				
C40	265172-0	+PAN HEAD SCREW M2.6X6		2		73181500		
005	183F38-7	MOTOR HOUSING SET		1				
D10		INC. 3						
006	266374-1	TAPPING SCREW 4X25		1		73181500		
007	267803-7	LOCK WASHER		2		73182200		
008	620696-7	BATTERY INTEGRAT CONTROLL ASS		1				
A01	D-61519	BIT CASE SET C		1				
A02	630A40-6	ADP07 AC ADAPTER		1	*			
A02-1	198371-8	ADP07 AC ADAPTER SET	<	1				
A03	661750-8	USB CABLE		1	*			
A03-1	661753-2	USB CABLE	O	1				
A04	821704-9	PLASTIC CASE		1				

Please order the parts with a part number.

Print Date 27/11/2019