Model No. 6412 DRILL 10MM

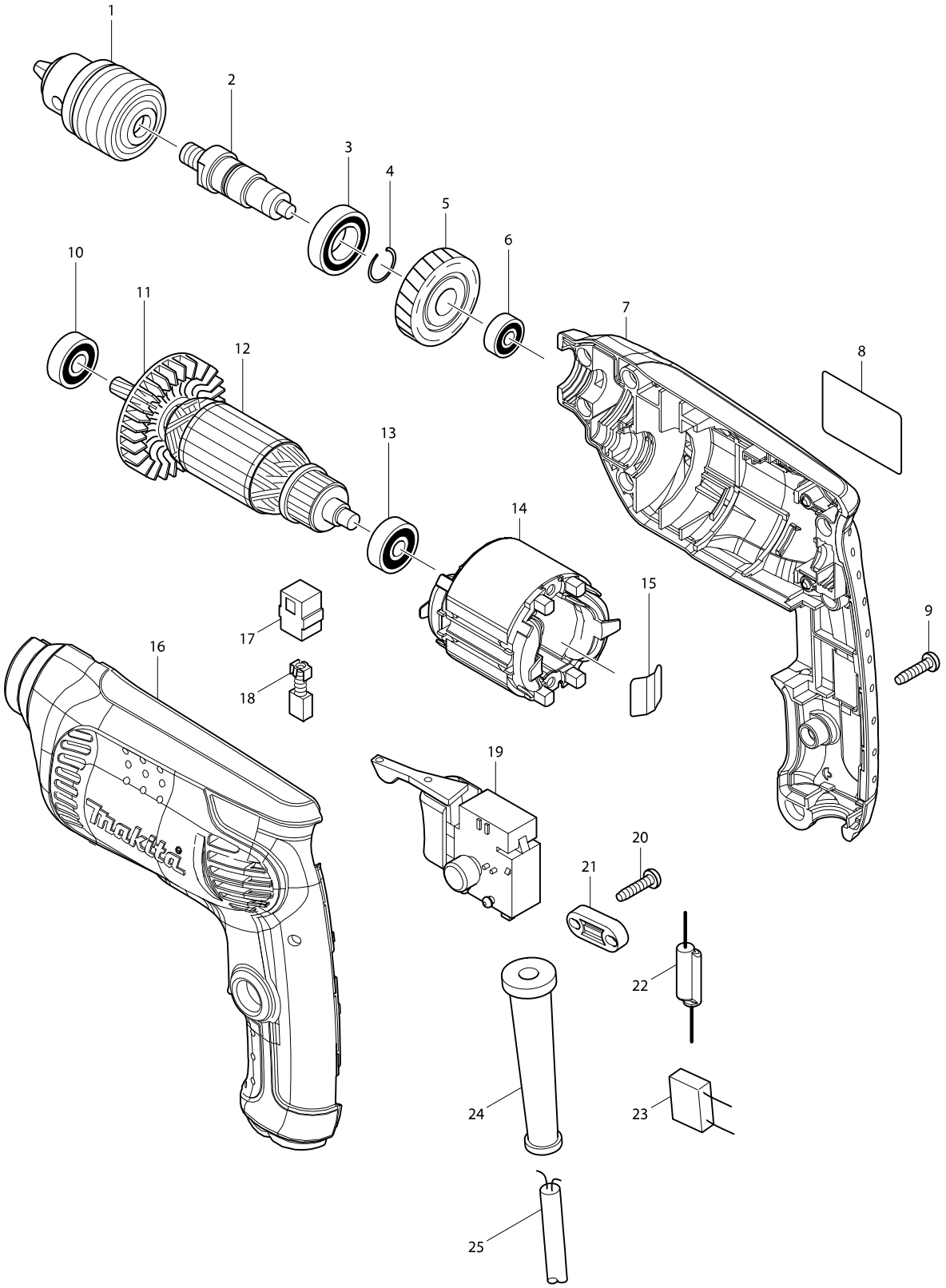

Model No. 6412 DRILL 10MM

Item	Parts No.	Description	I/C	QTY	N/O	Opt. 1	Opt. 2	NOTE
001	193706-8	DRILL CHUCK S10		1	*	82075000		
001-1	193706-8	DRILL CHUCK S10	<	1	*	82075000		
001-2	763244-0	DRILL CHUCK S10	O	1				
002	324376-4	SPINDLE		1		84679900		
003	211242-3	BALL BEARING 6902ZZ		1		84821090		
004	233925-5	RING SPRING 13		1		73209090		
005	226578-7	HELICAL GEAR 35		1		84679900		
006	210028-2	BALL BEARING 606ZZ		1		84821090		
007	188277-8	HOUSING SET		1		84679900		
C10	263002-9	RUBBER PIN 4		2		40169390		
D10		INC. 16						
008A	863394-2	6412 NAME PLATE		1				
008L	863394-2	6412 NAME PLATE		1				
009	266326-2	TAPPING SCREW 4X18		7		73181500		
010	211032-4	BALL BEARING 608ZZ		1		84821090		
011	240066-0	FAN 52		1		84145190		
012A	515699-3	ARMATURE ASS'Y 240V		1		85030090		
012L	515696-9	ARMATURE ASS'Y 115V		1				
D10		INC. 10,11,13						
013	210030-5	BALL BEARING 627ZZ		1		84821090		
014A	593644-8	FIELD ASS'Y 240V		1		85030090		
014L	593640-6	FIELD ASS'Y 100-115V		1				
C11	654037-5	INSULATED TERM. FT1.25-M3		1		73182990		
015	232210-3	LEAF SPRING		1		73209090		
016	188277-8	HOUSING SET		1		84679900		
C10	263002-9	RUBBER PIN 4		2		40169390		
D10		INC. 7						
017	643563-9	BRUSH HOLDER 5X8		2		82078000		
018	191627-8	CARBON BRUSH CB-64		1		85452000		
019A	650586-0	SWITCH DGQ-1104H		1		85366990		
019L	650585-2	SWITCH DGQ-1108B		1		85366990		
020	266326-2	TAPPING SCREW 4X18		2		73181500		
021	687123-7	STRAIN RELIEF		1		84679900		
024	682569-2	CORD GUARD 8-85		1		73182990		
025	666053-5	POWER SUPPLY CORD 1.0-2-2.0		1		85442090		
A01	418163-2	KEY HOLDER 10		1		82078000		
A02	763444-2	CHUCK KEY S10		1	*	84679900		
A02-1	763447-6	CHUCK KEY S10	O	1		84679900		