Model No. DUB361 CORDLESS BLOWER

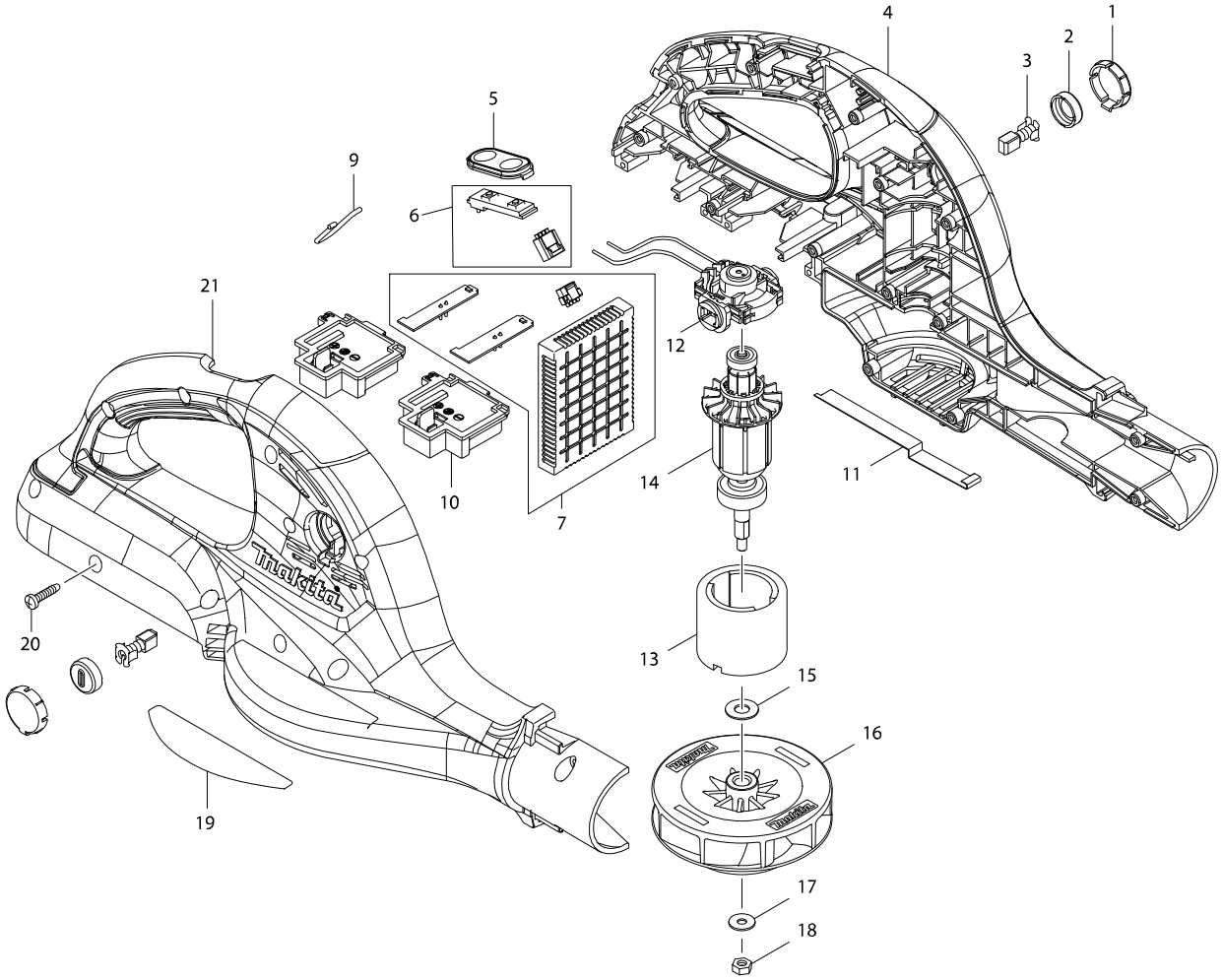

Model No. DUB361 CORDLESS BLOWER

Item	Parts No.	Description	I/C	QTY	N/O	Opt. 1	Opt. 2	NOTE
001	452145-4	HOLDER CAP COVER		2		84679900		
002	643929-3	BRUSH HOLDER CAP		2		82078000		
003	191971-3	CARBON BRUSH CB-430		1		85452000		
004	187850-1	HOUSING SET		1				
C10	263005-3	RUBBER PIN 6		4		40169390		
C20	891050-4	CAUTION LABEL		1				
D10		INC. 21						
005	140463-9	SWITCH PLATE COMPLETE		1		39269099		
006	620282-4	SWITCH COMPLETE		1				
007	620276-9	CONTROLLER		1				
009	325973-9	HANGER		1		73182990		
010	644808-8	TERMINAL		2		73182990		
011	346328-5	EARTH PLATE		1		73182990		
012	632B93-7	ENDBELL COMPLETE		1				
013	638420-4	YOKE UNIT		1		85030090		
014	619260-9	ARMATURE		1		85030090		
015	253865-1	FLAT WASHER 8		1		84679900		
016	240124-2	FAN 95		1		84145190		
017	253194-2	FLAT WASHER 5		1		84679900		
018	252177-9	HEX.NUT M5-8		1		73181500		
019	815N43-1	DUB361 NAME PLATE		1				
020	265995-6	TAPPING SCREW 4X18		14		73181500		
021	187850-1	HOUSING SET		1				
C10	263005-3	RUBBER PIN 6		4		40169390		
C20	891050-4	CAUTION LABEL		1				
D10		INC. 4						
A01	166095-4	SHOULDER BELT		1		39269099		
A02	452123-4	LONG NOZZLE		1		84679900		

Please order the parts with a part number.

Print Date 25/11/2019