Model No. DDF083 CORDLESS DRIVER DRILL

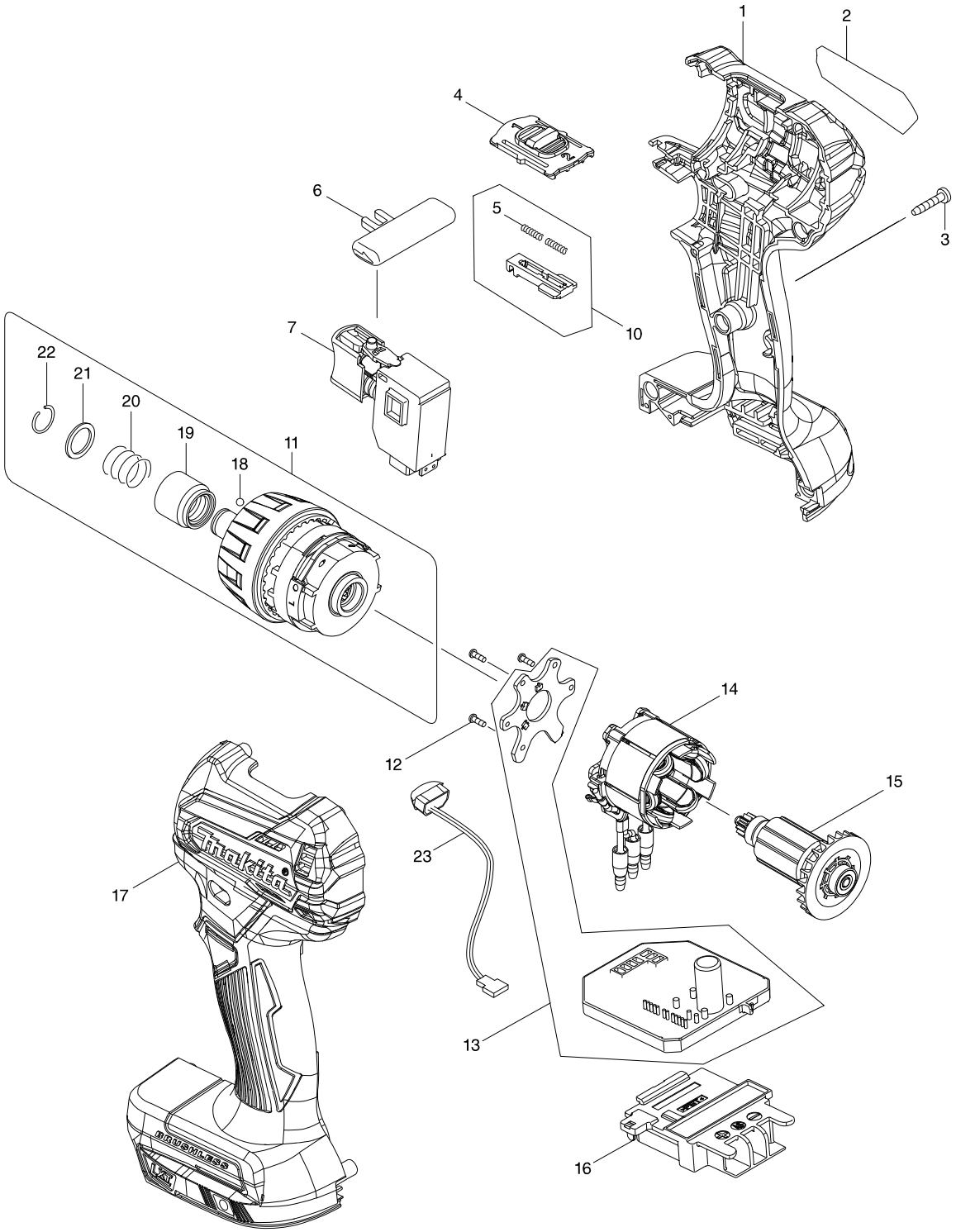

Model No. DDF083 CORDLESS DRIVER DRILL

Item	Parts No.	Description	I/C	QTY	N/O	Opt. 1	Opt. 2	NOTE
001	183E19-5	HOUSING SET		1		84679900		
C10	263005-3	RUBBER PIN 6		2		40169390		
C20	252126-6	HEX. LOCKING NUT M4-7		2		73181500		
D10		INC. 17						
002	852M58-1	DDF083 NAME PLATE		1				
003	266429-2	TAPPING SCREW 3X16		8		73181500		
004	457020-9	SPEED CHANGE LEVER		1	*	84679900		
004-1	458382-8	SPEED CHANGE LEVER	<	1				
005	233025-1	COMPRESSION SPRING 2		2		73209090		
006	419041-9	F/R CHANGE LEVER		1		73182990		
007	650689-0	SWITCH C3JW-2B		1		85366990		
010	123587-6	CHANGE LEVER ASS'Y		1		84679900		
D10		INC. 5						
011	123869-6	GEAR ASSEMBLY		1		84834090		
D10		INC. 18-22						
012	266490-9	TAPPING SCREW PT 2X6		3		73181500		
013	620555-5	CONTROLLER		1		84679900		
014	629228-7	STATOR		1		84679900		
015	619410-6	ROTOR		1		84679900		
016	643874-2	TERMINAL		1		73182990		
017	183E19-5	HOUSING SET		1		84679900		
C10	263005-3	RUBBER PIN 6		2		40169390		
C20	252126-6	HEX. LOCKING NUT M4-7		2		73181500		
D10		INC. 1						
018	216019-1	STEEL BALL 3		2		73182990		
019	326677-6	BIT SLEEVE		1		84679900		
020	233005-7	COMPRESSION SPRING 13		1		73209090		
021	347004-4	BIT WASHER		1		73182200		
022	231965-7	RING SPRING 10		1		73209090		
023	620549-0	LED CIRCUIT		1		84679900		
A01	251314-2	+ SCREW M4X12		1		73181500		
A02	346317-0	HOOK		1		73182990		
A03	784244-7	+ BIT 2-50		1		82075000		
A04B	141856-3	PLASTIC CARRYING CASE COMPLETI		1				
C10	162302-3	LATCH		2		73182990		
A05B	450128-8	BATTERY COVER		1		39269099		
A06B	***DC18RC	DC18RC FAST CHARGER		1				
D10		COMPO-PARTS						
A07B	197605-6	BATTERY BL1830B SET		2		85076000		

Please order the parts with a part number.

Print Date 25/11/2019