IN	INDIA

Diagram / Parts List

BO006CG

BATTERY POWERED ORBITAL SANDER

2024/07

(IN) BO006CG / BATTERY POWERED ORBITAL SANDER

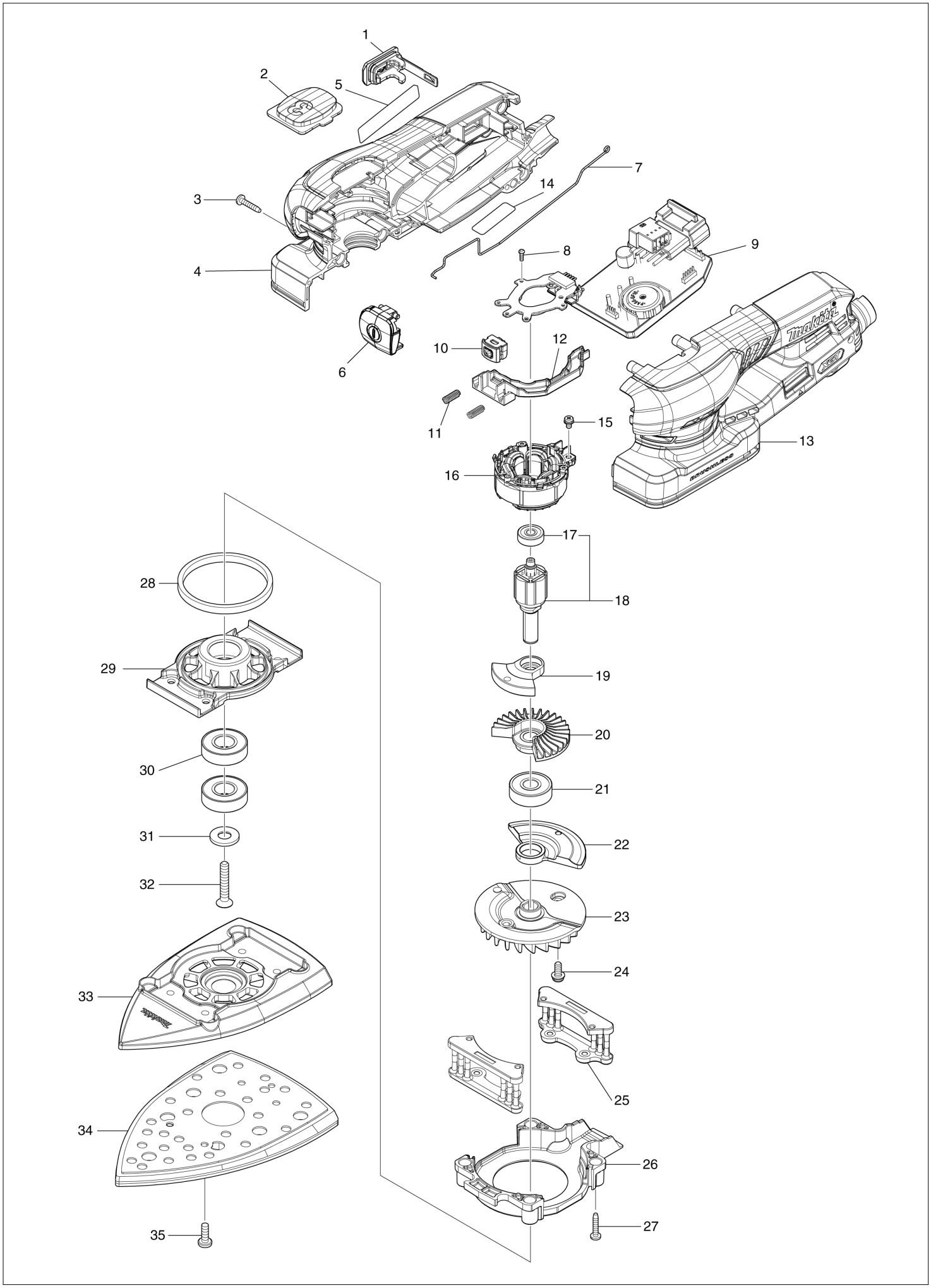

IN	INDIA

BO006CG / BATTERY POWERED ORBITAL SANDER

Item	Sub	Parts No.	Parts Description	Qty	I/C	E/C No.	Close No.	Remark
001		140F99-0	CAP COMPLETE	1				
	C10	213A05-9	O-RING16	1				
002		413Y38-0	INDICATION PLATE	1				
003		266429-2	TAPPING SCREW 3X16	7				
004		1830M7-3	HOUSING SET	1				
	C10	252126-6	HEX. LOCK NUT M4-7	2				
	D10		INC. 13					
005		8145X2-6	BO006CG NAME PLATE	1				
006		413Y40-3	SWITCH BUTTON	1				
007		327D52-3	EARTH WIRE	1				
008		266490-9	TAPPING SCREW PT 2X6	3				
009		620P01-4	CONTROLLER	1				
010		632L84-8	SWITCH UNIT	1				
011		233436-0	COMPRESSION SPRING 3	2				
012		413Y39-8	SWITCH HOLDER	1				
013		1830M7-3	HOUSING SET	1				
	C10	252126-6	HEX. LOCK NUT M4-7	2				
	D10		INC. 4					
014		8145X3-4	BO006CG SERIAL NO. LABEL	1				
015		652069-6	FLAT HEAD SCREW M3X6	3				
016		629C62-3	STATOR	1				
017		210035-5	BALL BEARING 625DDW	1				
018		519845-0	ROTOR ASSEMBLY	1				
	D10		INC. 17					
019		312F19-6	UPPER BALANCE WEIGHT	1				
020		240251-5	FAN 48	1				
021		211092-6	BALL BEARING 629DDW	1				
022		313533-9	LOWER BALANCE WEIGHT	1				
023		240252-3	FAN 68	1				
024		911113-1	PAN HEAD SCREW M4X10 WITH WR	1				
025		413Y53-4	FOOT	2				
026		413Y61-5	FAN GUIDE	1				
027		266429-2	TAPPING SCREW 3X16	4				
028		422B55-1	SPONGE 7X77X3	1				
029		312F15-4	BEARING BOX	1				
030		211131-2	BALL BEARING 6001DDW	2				
031		253602-3	FLAT WASHER 8	1				
032		912252-0	COUNTERSUNK HEAD SCREW M5X30	1				
033		413Y90-8	BASE	1				
034		141V54-1	PAD COMPLETE	1				
035		915116-7	BINDING HEAD SCREW M4X12	4				
A01		122G32-0	DUST BAG ASSY	1				
A02		154553-2	ARM BAND COMPLETE	1			DU661	
A02-1		194679-8	ARM BAND COMPLETE SET	1	O	DU661		
A03		413Y47-9	FRONT CUFF 22	1				
A04		D-78900	NET SANDING DELTA 100X150 A120	1				
A05		D-78944	NET SANDING DELTA 100X150	1				
A06		1914H3-6	BATTERY ADAPTER SET	1				
	D10		COMPO-PARTS					
A07		413Y92-4	PAD PROTECTOR	1				
F03		1914H7-8	PROTECTION COVER SET	1				
F04		1914H8-6	HARNESS SET	1				
F05		1914H9-4	SQUARE PAD SET	1				
F06		1914J0-6	TRIANGLE PAD SET	1				

A:BO006CGZ(N)

Interchange
O : Yes
X : No
< : the new part can be substituted for the current.
> : the current part can be substituted for the new.
S : Interchangeable as a set.