IN	INDIA

Diagram / Parts List

GA7090

180MM ANGLE GRINDER

2024/06

(IN) GA7090 / 180MM ANGLE GRINDER

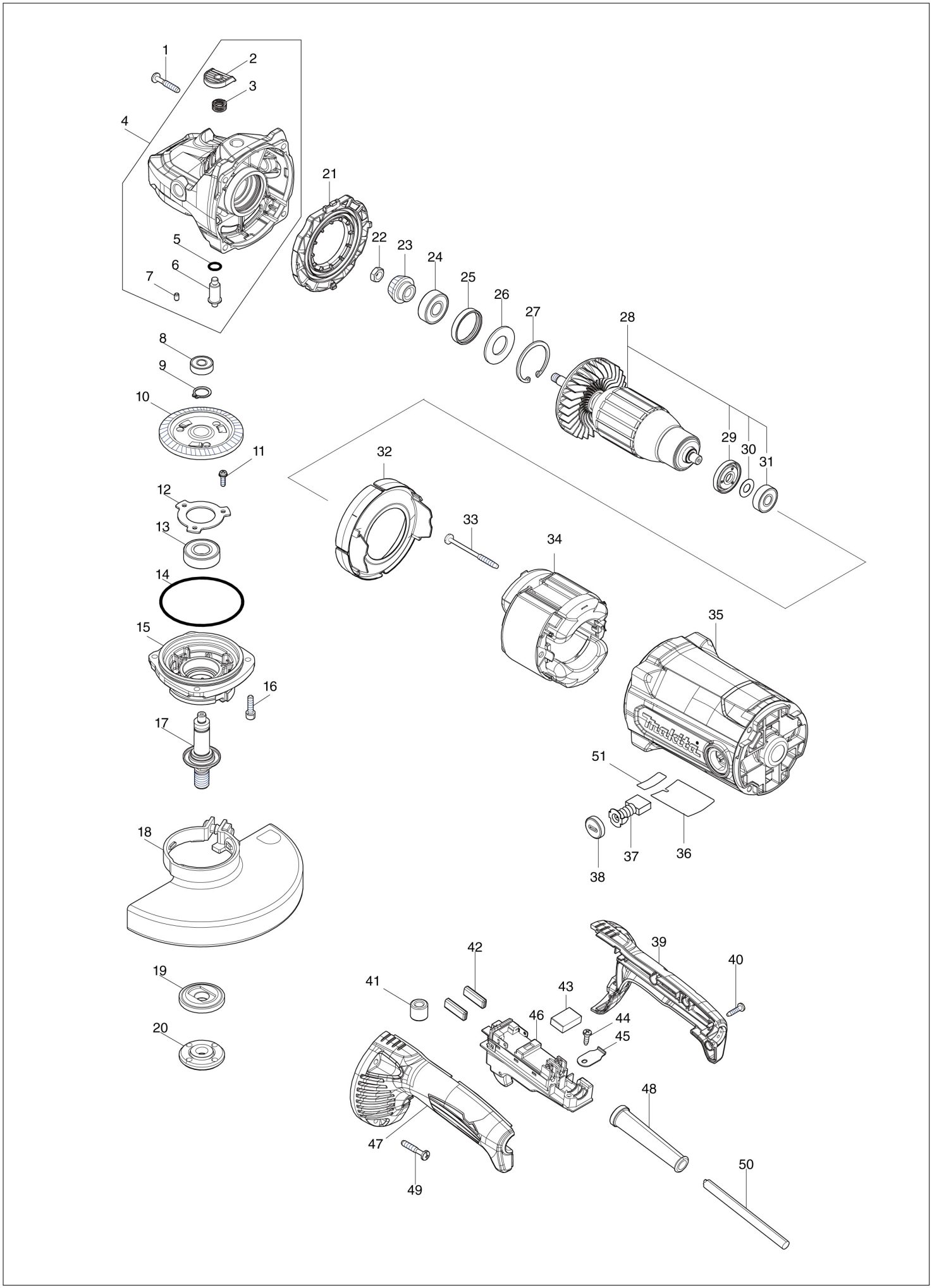

IN	INDIA

GA7090 / 180MM ANGLE GRINDER

Item	Sub	Parts No.	Parts Description	Qty	I/C	E/C No.	Close No.	Remark
001		251489-7	TAPPING SCREW 5X30	4				
002		413H41-9	PIN CAP	1				
003		233292-8	COMPRESSION SPRING 12	1				
004		137149-4	GEAR HOUSING ASSEMBLY	1				
	D10		IN. 2,3,5-7					
005		213062-1	O RING 9	1				
006		256491-5	SHOULDER PIN 5	1				
007		263002-9	RUBBER PIN 4	1				
008		210029-0	BALL BEARING 608ZZ	1				
009		961055-9	RETAINING RING S-15	1				
010		227B03-3	SPIRAL BEVEL GEAR 55	1				
011		911123-8	PAN HEAD SCREW M4X14	3				
012		285851-4	BEARING RETAINER	1				
013		211487-3	BALL BEARING 6202DDW	1				
014		213760-7	O RING 78	1				
015		312E61-1	BEARING BOX	1				
016		922231-0	HEX. SOCKET HEAD BOLT M5X20	4				
017		141T31-1	SPINDLE COMPLETE	1				
018		141P30-9	WHEEL COVER 180K COMPLETE	1				
	C10	265198-2	+PAN HEAD SCREW M8X25	1				
	C20	8050A1-8	CAUTION LABEL	1				
019		224490-5	INNER FLANGE 14-45	1				
020		224485-8	LOCK NUT 14-45	1				
021		413U69-5	DIFFUSER	1				
022		252194-9	HEX. NUT M8	1				
023		227B08-3	SPIRAL BEVEL GEAR 17	1				
024		210195-3	BALL BEARING 6201DDW	1				
025		422A90-3	RUBBER RING 33	1				
026		253587-3	FLAT WASHER 20	1				
027		962157-4	RETAINING RING R-40	1				
028		518388-9	ARMATURE ASSEMBLY 240V	1				
	D10		INC. 29-31					
029		681666-1	INSULATION WASHER	1				
030		267231-6	FLAT WASHER 9	1				
031		210194-5	BALL BEARING 629DDW	1				
032		413U68-7	BAFFLE PLATE	1				
033		266352-1	TAPPING SCREW 5X65	2				
034		634849-2	FIELD 240V	1				
035		141S76-3	MOTOR HOUSING COMPLETE	1				
036		8144Y5-1	GA7090 NAME PLATE	1				
037		194992-4	CARBON BRUSH SET CB-204	1				
038		644802-0	HOLDER CAP	2				
039		1830J9-8	HANDLE SET	1				
	D10		INC. 47					
040		266326-2	TAPPING SCREW 4X18	3				
042		686036-9	RECEPTACLE SLEEVE	2				
044		266385-6	TAPPING SCREW 4X14	1				
045		687169-3	STRAIN RELIEF	1				
046		632F74-5	SWITCH UNIT	1				
047		1830J9-8	HANDLE SET	1				
	D10		INC. 39					
048		682585-4	CORD GUARD 10	1				
049		251489-7	TAPPING SCREW 5X30	4				
050		697102-7	POWER SUPPLY CORD 1.0-2-2.0	1				
051		8144Y6-9	GA7090 SERIAL NO. LABEL	1				
A01		143486-6	GRIP 37 COMPLETE	1				
A02		782040-7	LOCK NUT WRENCH 35	1				

A:GA7090(H)

Interchange
O : Yes
X : No
< : the new part can be substituted for the current.
> : the current part can be substituted for the new.
S : Interchangeable as a set.