Model No. DF032D CORDLESS DRIVER DRILL

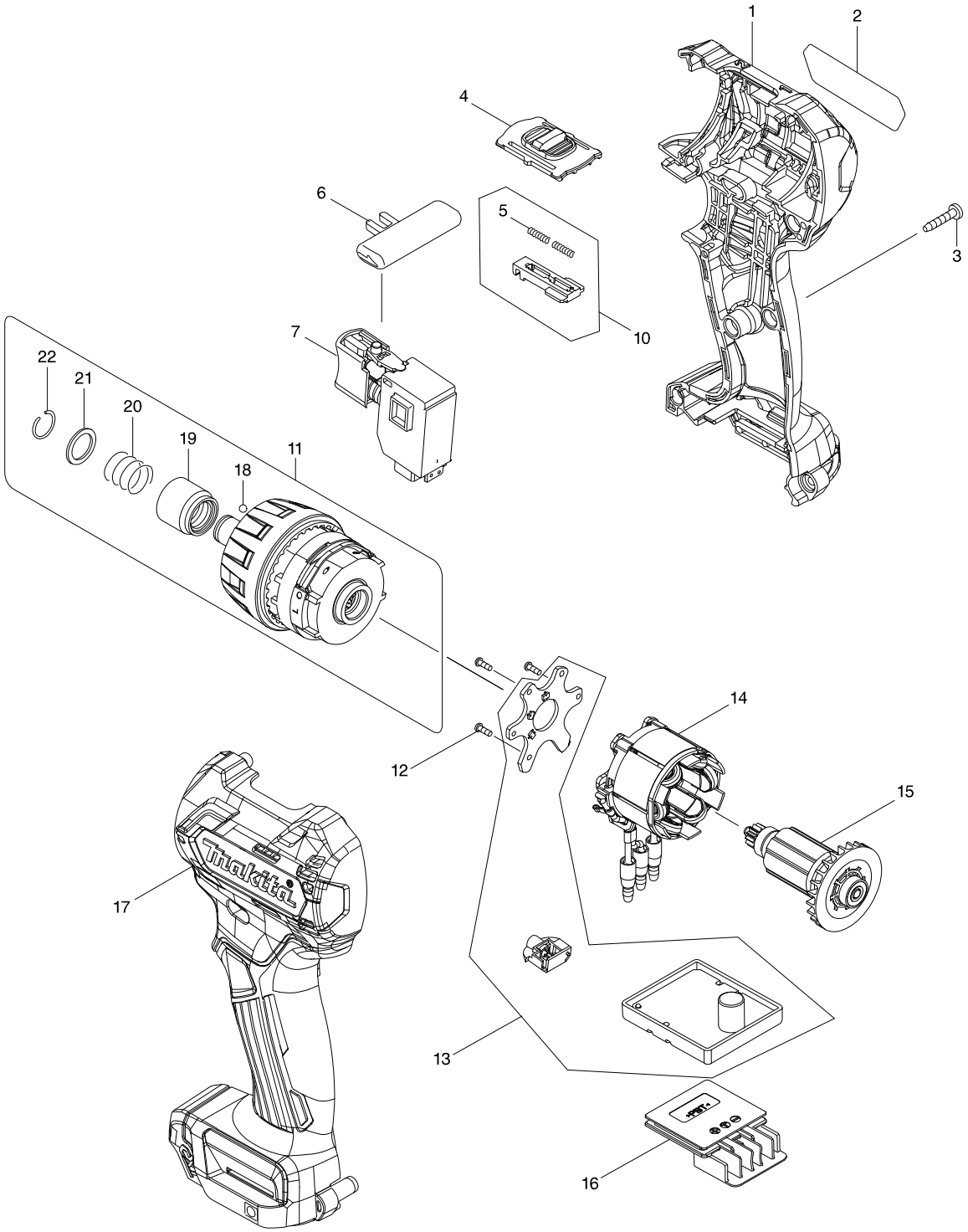

Model No. DF032D CORDLESS DRIVER DRILL

Item	Parts No.	Description	I/C	QTY	N/O	Opt. 1	Opt. 2	NOTE
001	183C34-7	HOUSING SET		1		84679900		
D10		INC. 17						
002	851U10-4	DF032D NAME PLATE		1	*			
002-1	851U09-9	DF032D NAME PLATE	<	1				
003	266429-2	TAPPING SCREW 3X16		8		73181500		
004	456532-9	SPEED CHANGE LEVER		1		84834090		
005	233025-1	COMPRESSION SPRING 2		2		73209090		
006	419041-9	F/R CHANGE LEVER		1		73182990		
007	650689-0	SWITCH C3JW-2B		1		85366990		
010	123587-6	CHANGE LEVER ASS'Y		1		84679900		
D10		INC. 5						
011	123550-9	GEAR ASSEMBLY		1	*	84834000		
D10		INC. 18-22			*			
011-1	123869-6	GEAR ASSEMBLY	O	1		84834090		
D10		INC. 18-22						
012	266490-9	TAPPING SCREW PT 2X6		3		73181500		
013	620487-6	CONTROLLER		1	*	85044091		
013-1	620487-6	CONTROLLER	O	1		85044091		
C10	620553-9	LED CIRCUIT		1		94059900		
014	629178-6	STATOR		1		84679900		
015	619393-0	ROTOR		1	*			
015-1	619410-6	ROTOR	O	1		84679900		
016	644813-5	TERMINAL		1		73182990		
017	183C34-7	HOUSING SET		1		84679900		
D10		INC. 1						
018	216019-1	STEEL BALL 3		2		73182990		
019	326677-6	BIT SLEEVE		1		84679900		
020	233005-7	COMPRESSION SPRING 13		1		73209090		
021	347004-4	BIT WASHER		1		73182200		
022	231965-7	RING SPRING 10		1		73209090		
A01	251314-2	+ SCREW M4X12		1		73181500		
A02	346909-5	HOOK		1		73269099		
A03	784244-7	+ BIT 2-50		1		82075000		
A04B	456128-6	BATTERY COVER		1				
A05B	***DC10WD	DC10WD BATTERY CHARGER		1				
D10		COMPO-PARTS						
A06B	197393-5	BATTERY BL1016 SET		2	*	85068090		
A06-1B	198007-9	BATTERY BL1016 SET	<	2		85076000		
A07B	821661-1	PLASTIC CARRYING CASE		1				
C10	417724-5	LATCH		2		73182990		

Please order the parts with a part number.

Print Date 26/11/2019